UNI STANDARD SOFT CLOSE SEAT & COVER (FOR , 66077)



Product Code: 66101

PRODUCT INFORMATION

Finish:	Gloss White
Height:	51mm
Width:	369mm
Depth:	447mm
Material	Plastic
Weight	3.8kg
Guarantee	2 years
Compatible Pan(s)	66070, 660701, 660702, 66074, 66077, 66076, 50074, 50077, AUWH01, AUWH02
Seat Type	Soft close & quick release

DESCRIPTION

UNI is our collection of modern, handle-less furniture and ceramics to allow you to create a contemporary bathroom set up.

This UNI standard seat is both seat soft-closing and has a quick release button. The soft-closing mechanism prevents the seat and cover from slamming, whilst the quick release button allows you to easily and quickly remove the seat from the pan to make cleaning easy.

The 66102 slim-line soft-close seat is also available.

*Pan sold separately
Compatible pans: 66070, 660701, 660702, 66074, 66076, 66077

TECHNICAL DRAWING

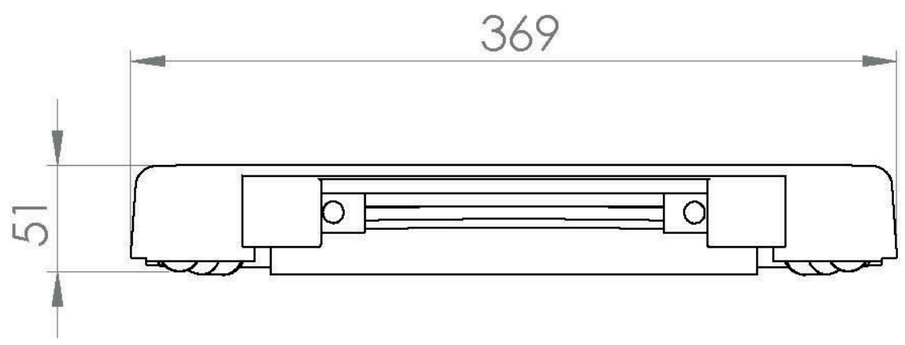

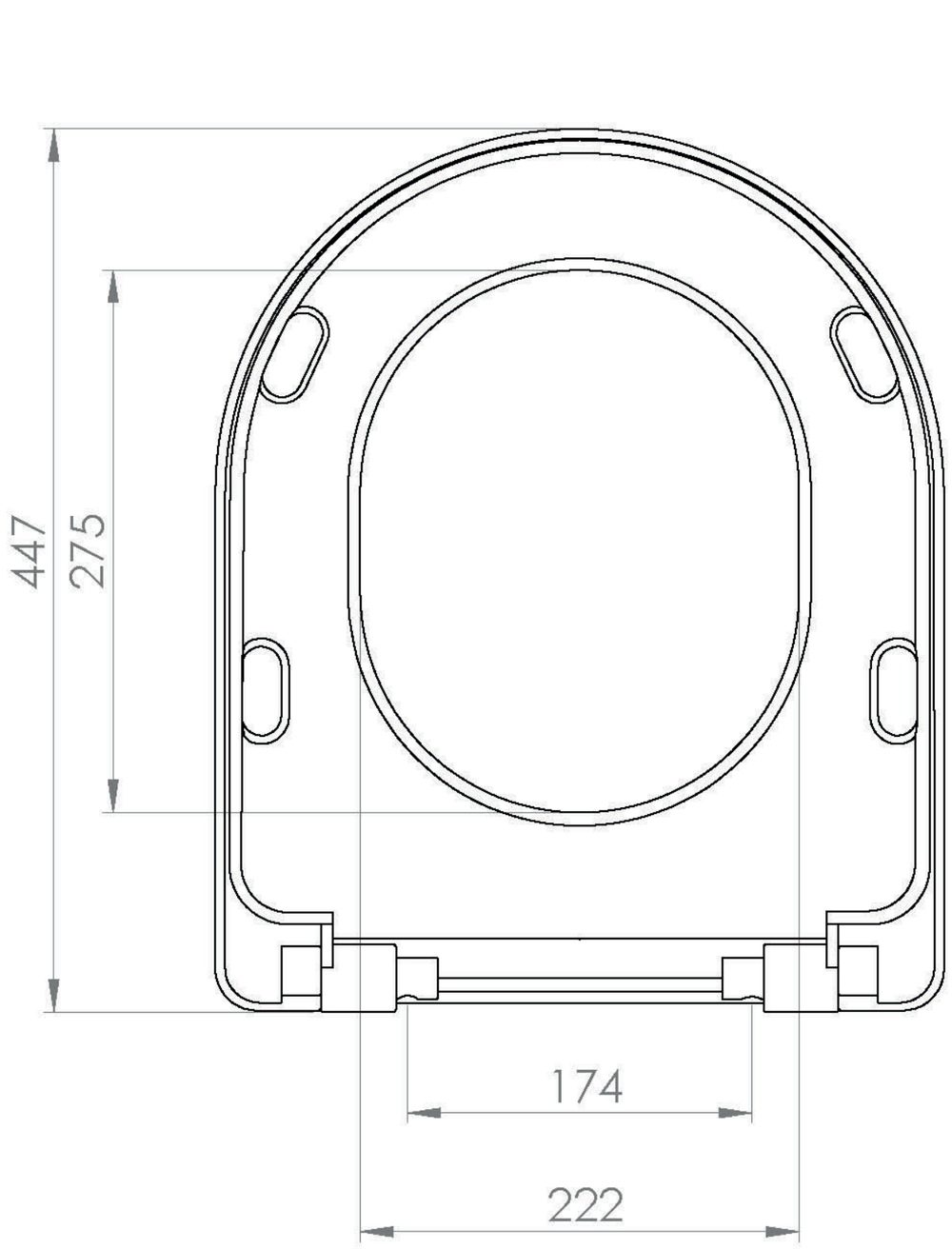

Saneux reserves the right to alter the specifications and product range without prior notice. Dimensions are given as a guide only. Dimensions should not be used for surrounding furniture, fixtures and fittings until the product is on site.

https://saneux.com/products/uni-standard-soft-close-seat-cover-for-66070-66074-66076-66077