UNI CLOSE COUPLED WC PAN - RIMLESS



Product Code: 66070

PRODUCT INFORMATION

Finish:	Gloss White
Height:	425mm
Width:	365mm
Depth:	655mm
Material	Ceramic
Weight	37kg
Guarantee	Lifetime
Compatible Toilet Seat(s)	66101, 66102, 66102W, 500.59
Compatible Cistern(s)	66071, UNCI01
Type of Flushing	Rimless technology

DESCRIPTION

UNI is our collection of modern, handle-less furniture and ceramics to allow you to create a contemporary bathroom set up.

The UNI close coupled pan has a sleek design with its rounded base and back to wall look to hide pipework. It also has rimless flush technology, meaning there is no obvious rim around the inside of the pan and instead has a clean look. This also prevents the build up of limescale and bacteria which will ensure your pan is hygienic and easy to clean, which is perfect for busy family bathrooms.

*Cistern and seat sold separately
Compatible cistern: 66071
Compatible seats: 66101, 66102

TECHNICAL DRAWING

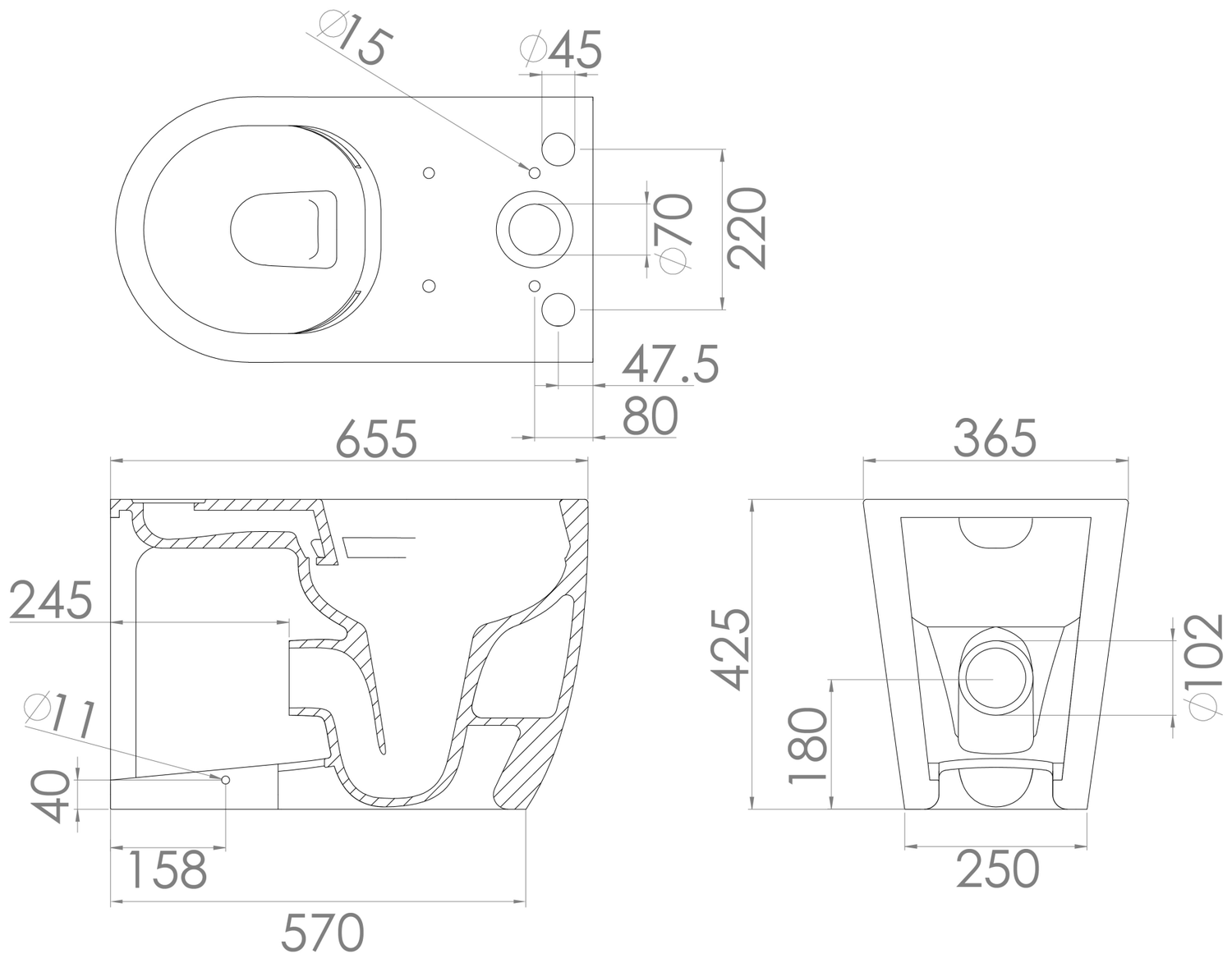

Saneux reserves the right to alter the specifications and product range without prior notice. Dimensions are given as a guide only. Dimensions should not be used for surrounding furniture, fixtures and fittings until the product is on site.

https://saneux.com/products/uni-close-coupled-wc-pan-rimless