MATTEO STANDARD SOFT CLOSE SEAT (FOR MACC01, MABTW01 & MAWH01)



Product Code: MATS01

PRODUCT INFORMATION

Finish:	Gloss White
Height:	34.7mm
Width:	370mm
Depth:	425mm
Material	ABS Plastic
Weight	2.3kg
Guarantee	2 years
Compatible Pan(s)	MACC01, MACC01.L, MACC01.R, MABTW01, MAWH01
Seat Type	Soft close & quick release
Compatible Flush Buttons	FB2.BB, FB2.MB

DESCRIPTION

MATTEO offers an unmistakable style with it's square design that is fit for any modern bathroom.

The soft-closing function prevents the seat and cover from slamming, whilst the quick release mechanism allows the seat to be lifted off the pan with ease so you can clean the pan and seat thoroughly. It pairs with our rimless MATTEO pans.

*Pan sold separately
Compatible pans: MACC01, MACC01.L, MACC01.R, MAWH01, MABTW01

TECHNICAL DRAWING

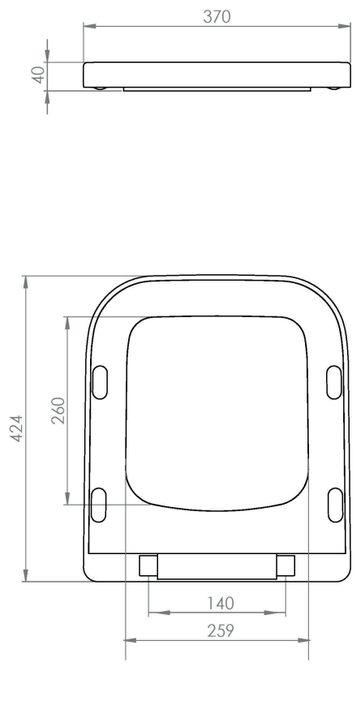

Saneux reserves the right to alter the specifications and product range without prior notice. Dimensions are given as a guide only. Dimensions should not be used for surrounding furniture, fixtures and fittings until the product is on site.

https://saneux.com/products/matteo-standard-soft-close-seat-for-macc01-mabtw01-mawh01