MATTEO BACK TO WALL WC PAN - RIMLESS



Product Code: MABTW01

PRODUCT INFORMATION

Finish:	Gloss White
Height:	420mm
Width:	365mm
Depth:	518mm
Material	Ceramic
Weight	32.1kg
Guarantee	Lifetime
Compatible Toilet Seat(s)	MATS01
Compatible Cistern(s)	HC2036, HC2037, HC2030
Type of Flushing	Rimless technology

DESCRIPTION

MATTEO offers an unmistakable style with it's square design that is fit for any modern bathroom.

This MATTEO back to wall pan has straight lines and subtle curves which adds a softer look to it, plus allows it to pair with other collections of ours like HYDE. It is also rimless which prevents the build up of grime and bacteria, and makes cleaning simple.

Create a tidy bathroom space and opt for a back to wall pan; you can hide the cistern by having it built into the wall or a WC unit as well as save on floor space.

*Seat sold separately
Compatible seat: MATS01

For optimal performance, we recommend pairing back to wall rimless pans with a high-level concealed cistern set at 6/3lt flushing.

See our FLUSHE 2.0 range for compatible WRAS approved concealed cisterns.

TECHNICAL DRAWING

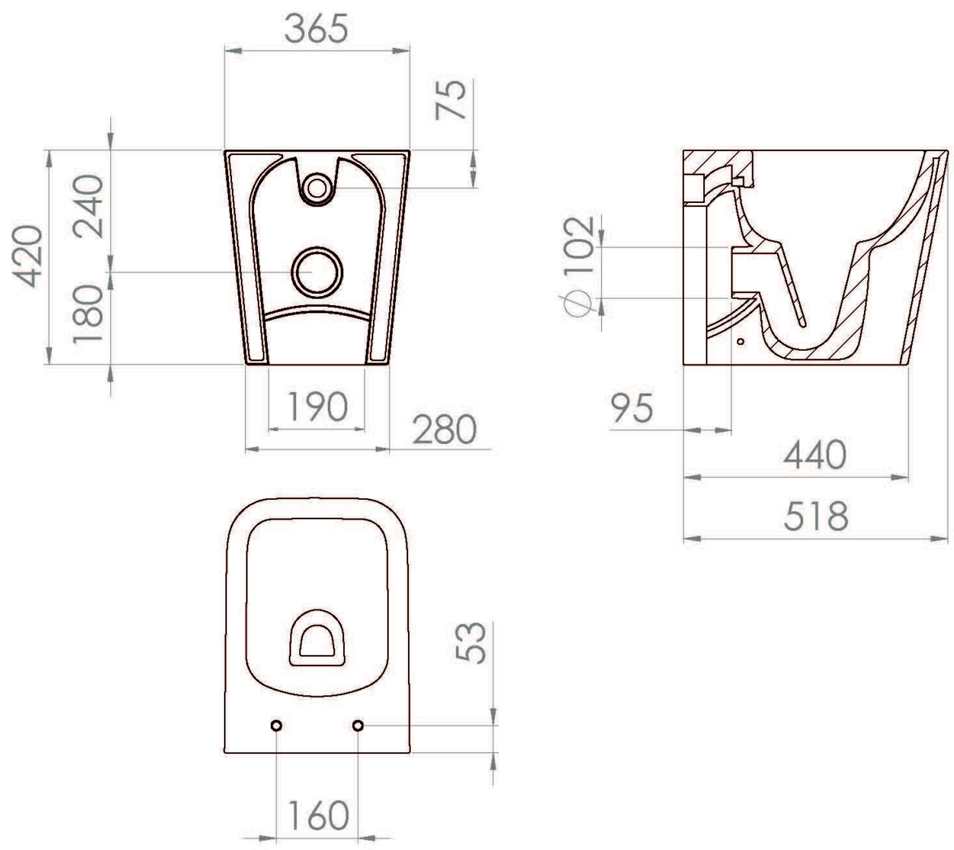

Saneux reserves the right to alter the specifications and product range without prior notice. Dimensions are given as a guide only. Dimensions should not be used for surrounding furniture, fixtures and fittings until the product is on site.

https://saneux.com/products/matteo-back-to-wall-wc-pan-rimless