HYDE 55X37CM WASHBASIN 1TH



Product Code: HY055B

PRODUCT INFORMATION

Finish:	Gloss White
Height:	160mm
Width:	550mm
Depth:	375mm
Material	Ceramic
Weight	12.6kg
Overflow(s)	Yes
Overflow Position	Off Centre (to the left)
Overflow Diameter	22mm
Compatible Overflows	OC01, OC02, OC03
Tap Holes	1 Tap Hole
Tap Hole Position	Centre
Recommended Waste Required	Slotted waste
Furniture Required For Installation?	Optional
Guarantee	Lifetime

DESCRIPTION

As the name suggests, the HYDE collection features short projection basins and vanity units with a contemporary design, perfect for small and compact spaces.

This HYDE 55x37cm 1 tap hole washbasin has slim edges with a deep bowl, cleverly utilising every inch of ceramic available. Its curved edges give a soft feel to the basin, and its projection of 37cm allows it to fit in narrow bathrooms.

Pairs with the HYDE 55cm 1 & 2 drawer wall mounted units and 2 door floor standing units.

*With an overflow

TECHNICAL DRAWING

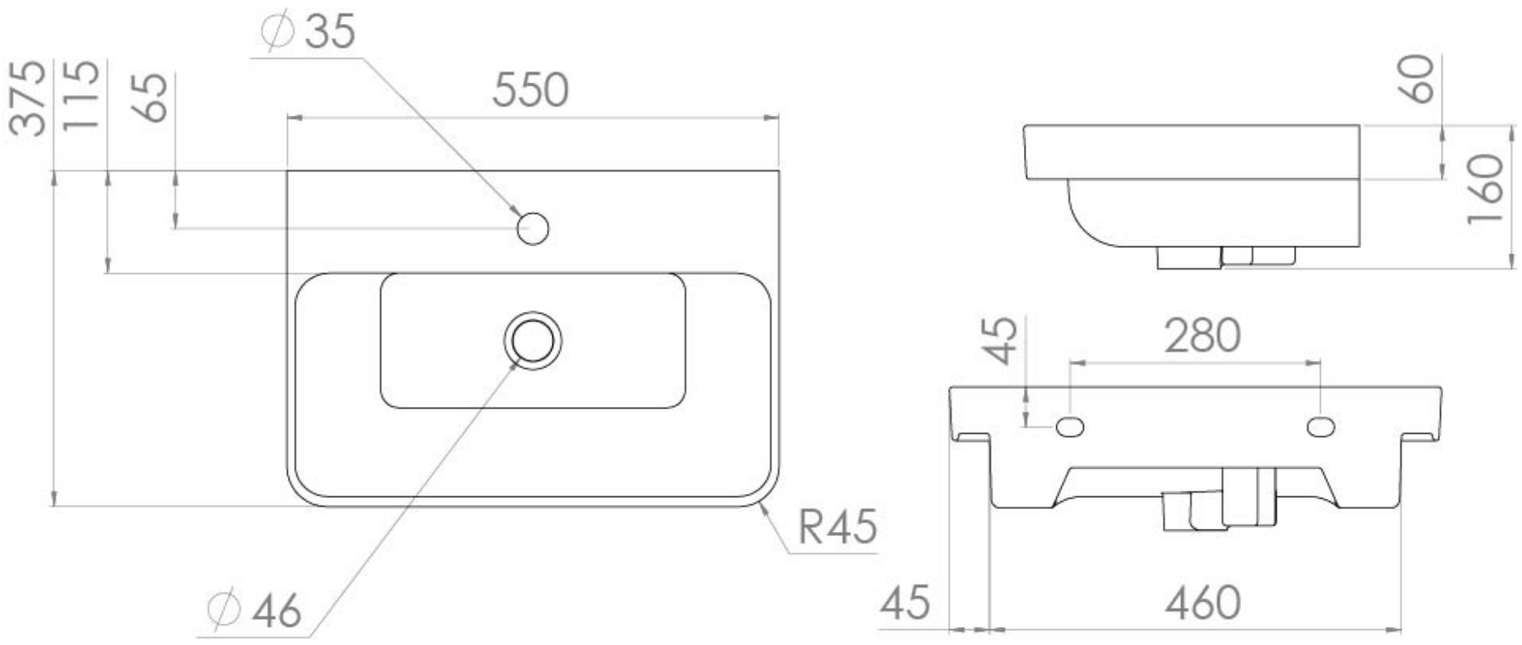

Saneux reserves the right to alter the specifications and product range without prior notice. Dimensions are given as a guide only. Dimensions should not be used for surrounding furniture, fixtures and fittings until the product is on site.

https://saneux.com/products/hyde-55x37cm-washbasin-1th