HYDE 50X28CM CLOAKROOM WASHBASIN RIGHT TAP HOLE

Product Code: HY050CB.R

PRODUCT INFORMATION

Finish:	Gloss White
Height:	145mm
Width:	500mm
Depth:	280mm
Material	Ceramic
Weight	7.9kg
Tap Holes	1 Tap Hole
Tap Hole Position	Right Hand
Extra Tap Hole Options	N/A
Recommended Waste Required	Unslotted waste
Furniture Required For Installation?	Optional
Guarantee	Lifetime

DESCRIPTION

As the name suggests, the HYDE collection features short projection basins and vanity units with a contemporary design, perfect for small and compact spaces.

This HYDE 50x28cm cloakroom washbasin with a right hand tap hole has a uniquely shaped bowl and will fit in the most compact of spaces thanks to its short projection of only 28cm.

Pairs with the HYDE 50cm cloakroom 2 door wall mounted and floor standing units.

*No overflow

TECHNICAL DRAWING

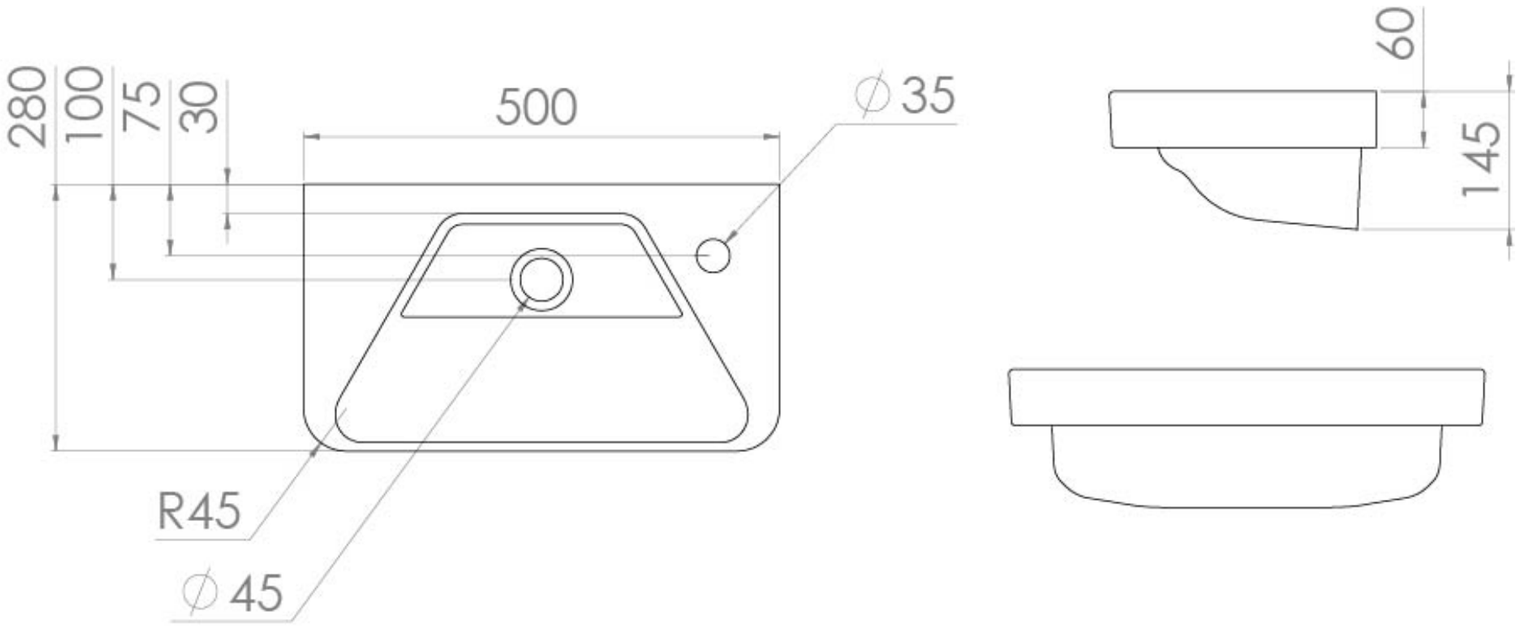

Saneux reserves the right to alter the specifications and product range without prior notice. Dimensions are given as a guide only. Dimensions should not be used for surrounding furniture, fixtures and fittings until the product is on site.