COS TALL BASIN MIXER - BRUSHED NICKEL



Product Code: CO204.BN

PRODUCT INFORMATION

Width:	53mm
Finish:	Brushed Nickel (PVD)
Height:	329.6mm
Depth:	176.7mm
Material:	Brass
Product Type:	Tall Basin Mixer Tap, Deck Mounted Basin Mixer Tap
Approvals:	WRAS Approved
Weight	1.63kg
Waste	Not included, purchase separately
Guarantee	5 years
Spout Projection (mm)	155.5mm
Other Features	Pair with a countertop basin
Material	Brass
Approvals/Standards	WRAS

DESCRIPTION

The COS collection was designed to create brassware that was both modern and classic to suit any style of bathroom.

This COS tall basin mixer in this stunning brushed nickel finish will instantly add a luxury touch to your bathroom, and with it having a PVD finish, it will continuously look flawless for years to come. It is best suited with a countertop basin and countertop because of its height.

Waste to be purchased separately.

TECHNICAL DRAWING

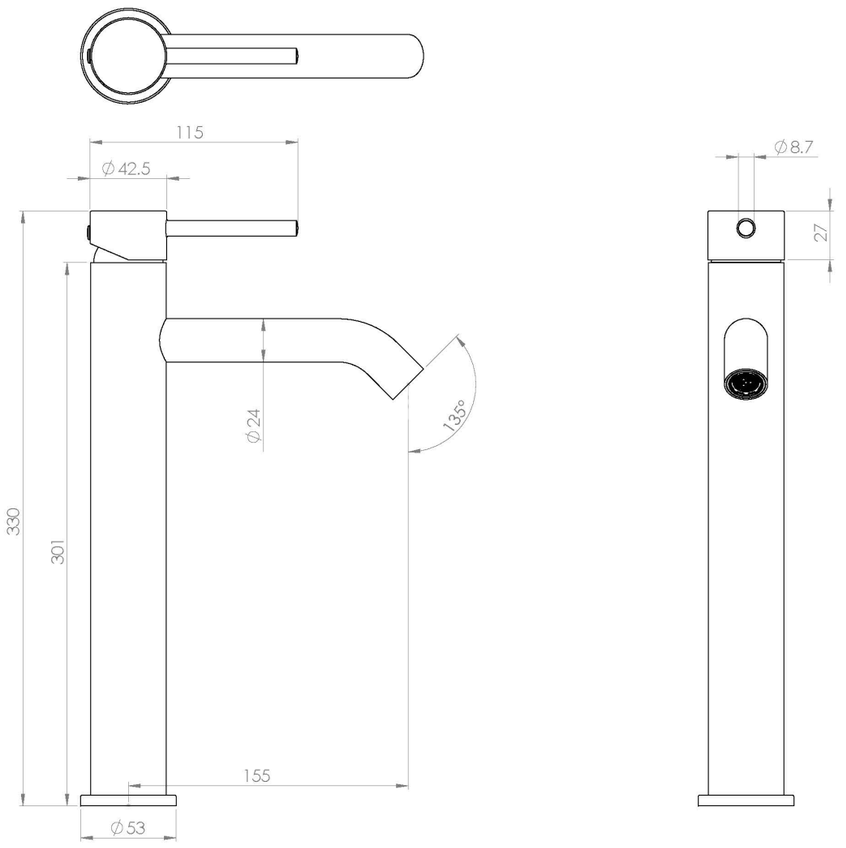

FLOW RATE

- 0.2 Bar - Flowrate: 3.1 l/min
- 0.3 Bar - Flowrate: 3.6 l/min
- 0.4 Bar - Flowrate: 4.1 l/min
- 0.5 Bar - Flowrate: 4.5 l/min
- 1 Bar - Flowrate: 6.3 l/min
- 2 Bar - Flowrate: 9 l/min
- 3 Bar - Flowrate: 11.1 l/min
- 4 Bar - Flowrate: 13 l/min
- 5 Bar - Flowrate: 14.6 l/min

Saneux reserves the right to alter the specifications and product range without prior notice. Dimensions are given as a guide only. Dimensions should not be used for surrounding furniture, fixtures and fittings until the product is on site.

https://saneux.com/products/cos-tall-basin-mixer-brushed-nickel