COS WALL MOUNTED 2 PLATE BASIN MIXER - MATTE BLACK



Product Code: CO2052.MB

PRODUCT INFORMATION

Width:	208.5mm
Finish:	Matte Black (Electroplated)
Height:	80mm
Depth:	226.8mm
Material:	Brass
Product Type:	Wall Mounted Basin Mixer Tap
Approvals:	WRAS Approved
Weight	1.44kg
Compatible Aerator(s)	Cache TJ
Waste	Not included, purchase separately
Guarantee	5 years
Spout Projection (mm)	169.8mm
Other Features	Pair with a 0 tap hole or countertop basin
Material	Brass
Approvals/Standards	WRAS

DESCRIPTION

The COS collection was designed to create brassware that was both modern and classic to suit any style of bathroom.

This COS wall mounted 2 plate basin mixer in matte black is a great option and will perfectly match any of our ceramic and furniture ranges. Pair it with any of our no tap hole washbasins or our SIENNA countertop basins.

Waste to be purchased separately.

TECHNICAL DRAWING

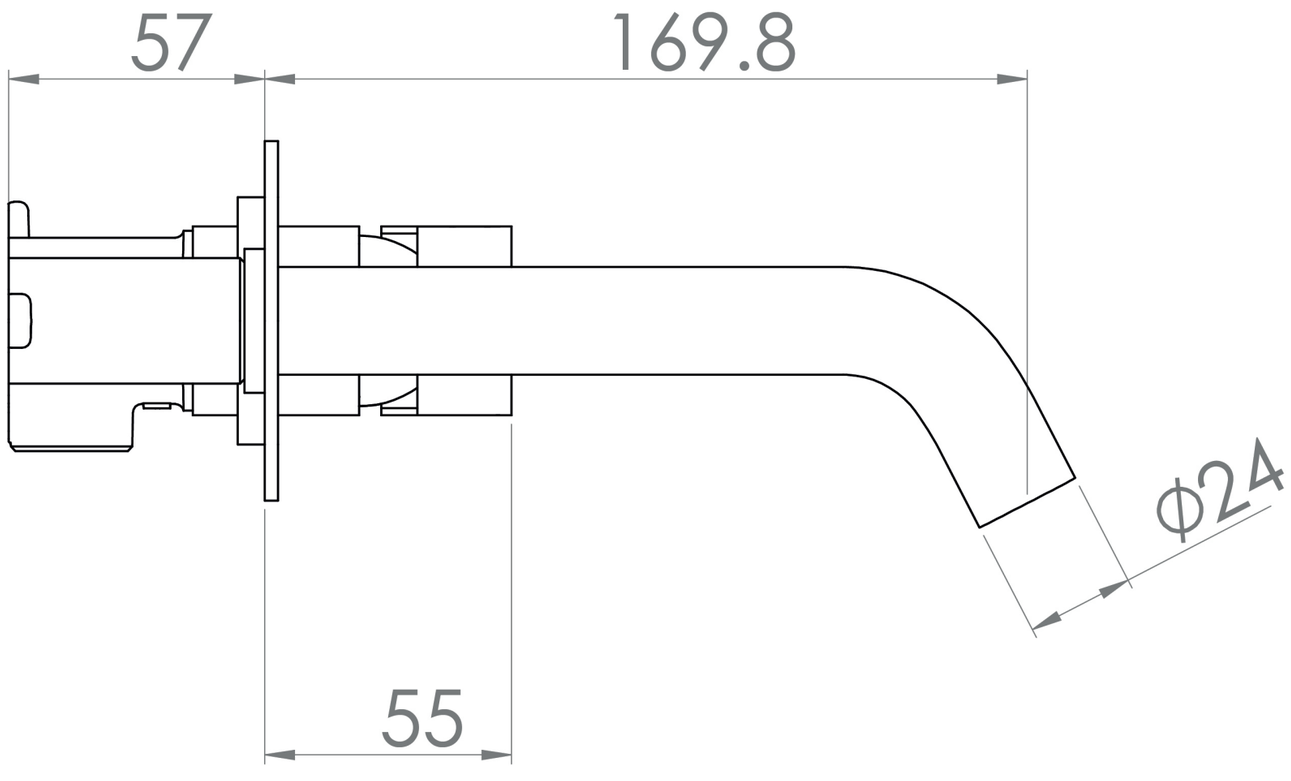

FLOW RATE

- 0.2 Bar - Flowrate: 3 l/min
- 0.3 Bar - Flowrate: 3.6 l/min
- 0.4 Bar - Flowrate: 4.2 l/min
- 0.5 Bar - Flowrate: 4.6 l/min
- 1 Bar - Flowrate: 6.4 l/min
- 2 Bar - Flowrate: 9.1 l/min
- 3 Bar - Flowrate: 11.2 l/min
- 4 Bar - Flowrate: 13.1 l/min
- 5 Bar - Flowrate: 14.7 l/min

Saneux reserves the right to alter the specifications and product range without prior notice. Dimensions are given as a guide only. Dimensions should not be used for surrounding furniture, fixtures and fittings until the product is on site.

https://saneux.com/products/cos-wall-mounted-2-plate-basin-mixer-matte-black