COS 100MM ROUND CEILING MOUNTED SHOWER

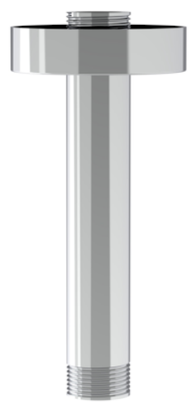

Product Code: CO237

PRODUCT INFORMATION

Finish:	Chrome
Height:	105.5mm
Width:	56.6mm
Depth:	56.6mm
Material	Brass
Weight	0.2kg
Guarantee	5 years

DESCRIPTION

The COS collection was designed to create brassware that was both modern and classic to suit any style of bathroom.

The COS ceiling mounted shower arm in chrome is only 100mm tall, making it perfect for bathrooms with low ceilings that want a clean minimalist look. It can work with all our shower heads and instantly creates a luxurious rainfall style shower experience.

TECHNICAL DRAWING

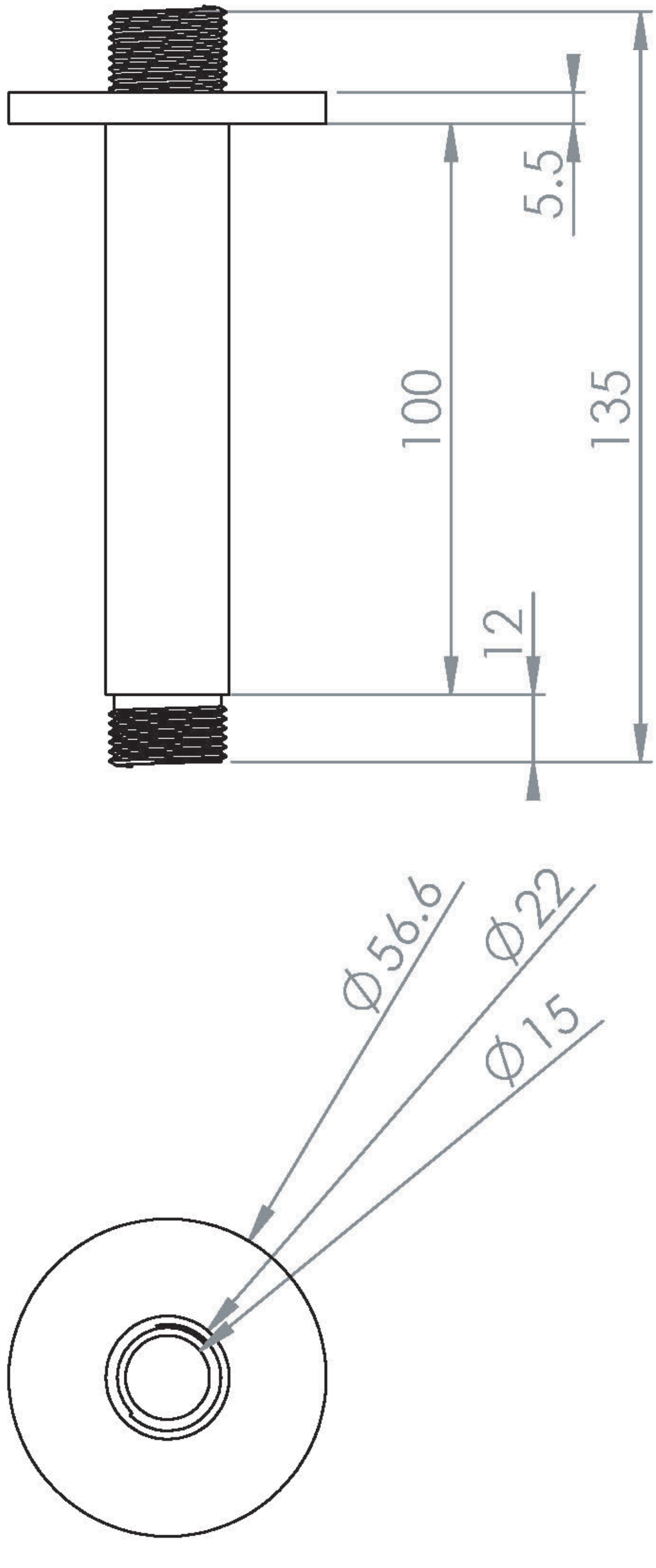

Saneux reserves the right to alter the specifications and product range without prior notice. Dimensions are given as a guide only. Dimensions should not be used for surrounding furniture, fixtures and fittings until the product is on site.

https://saneux.com/products/cos-100mm-round-ceiling-mounted-shower-arm-chrome