HYDE 55CM SHORT PROJECTION 2 DRAWER WALL _ISH OAK



Product Code: HY055W2.EO.2

PRODUCT INFORMATION

Finish:	English Oak
Height:	500mm
Width:	535mm
Depth:	365mm
Guarantee	5 years
Configuration	2 Drawer
Drawer Type	Soft close
Compatible Basin(s)	HY055B, HY055B.0TH
Handle(s) Required	2, purchase separately
Other Features	Easy installation Quick release drawers
Material	MDF, MFC
Weight	21.6kg

DESCRIPTION

Inspired by the quiet character of Hyde Park, English Oak brings natural warmth and subtle texture to the HYDE Short Projection collection. Its weathered grain gives a softer, more considered feel to contemporary bathroom interiors.

Short on projection, not on presence. At just 37cm deep, this 55cm wall-mounted unit is designed to make smaller bathrooms and cloakrooms feel less compromised, while still giving you generous everyday storage.

Two deep, soft-closing drawers keep toiletries neatly out of sight, while the wall-mounted design helps create a lighter, more spacious feel.

Basin to be purchased separately
Compatible basin: HY055B, HY055B.0TH

Handles to be purchased separately

TECHNICAL DRAWING

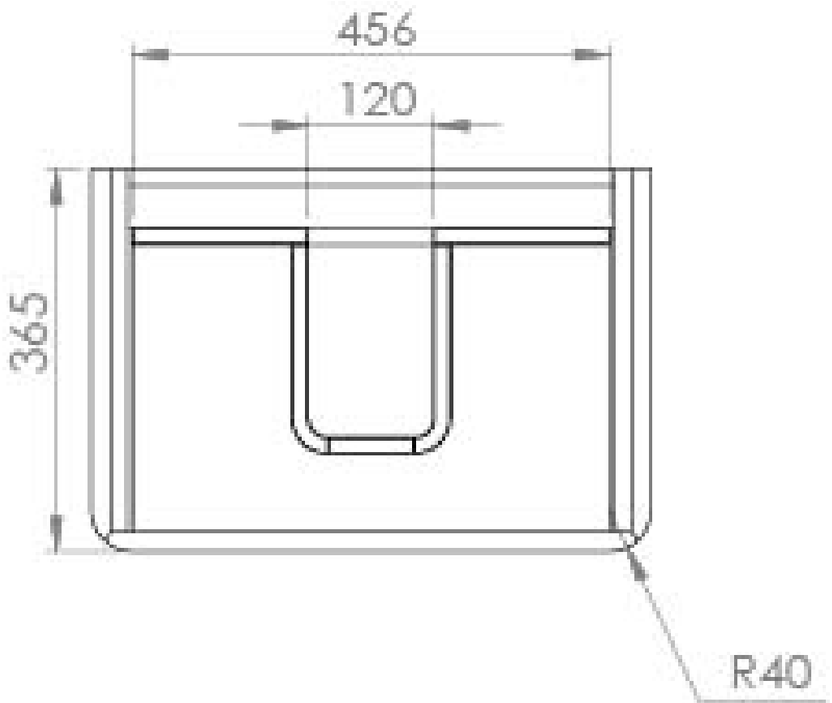

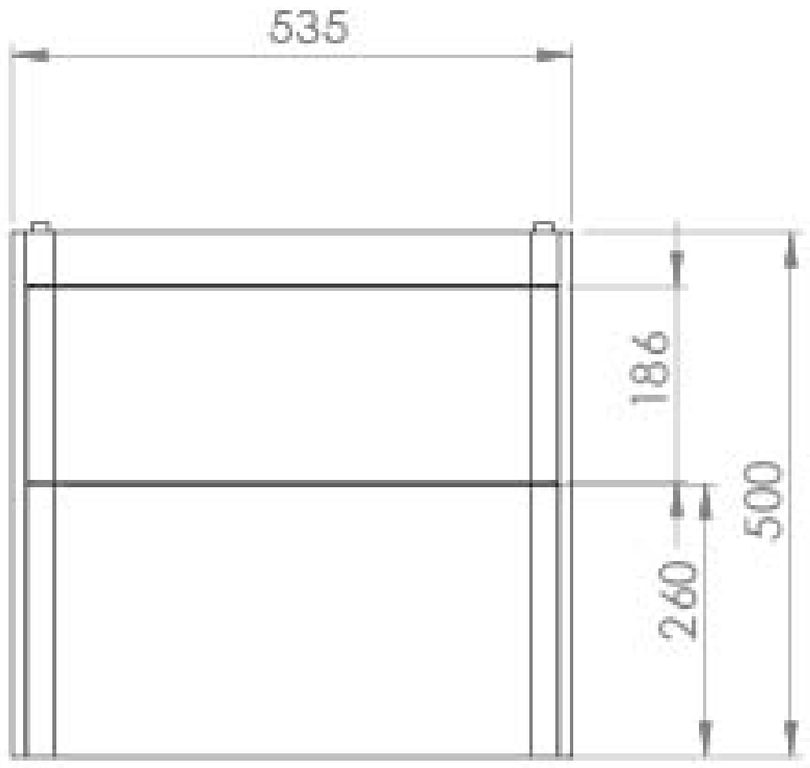

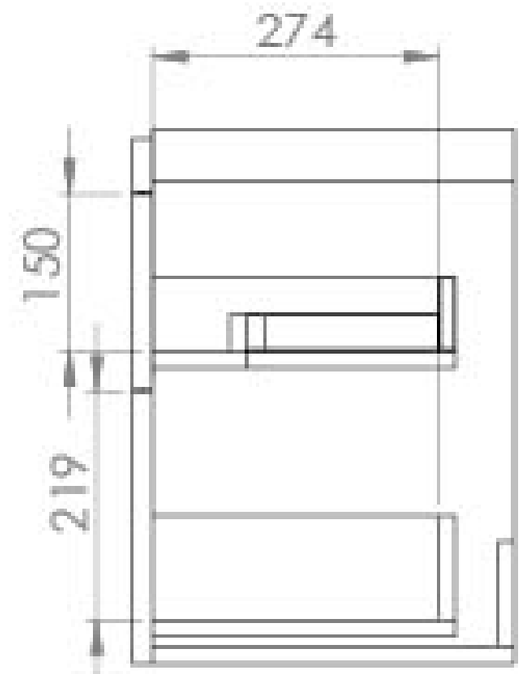

Saneux reserves the right to alter the specifications and product range without prior notice. Dimensions are given as a guide only. Dimensions should not be used for surrounding furniture, fixtures and fittings until the product is on site.

https://saneux.com/products/hyde-55cm-short-projection-2-drawer-wall-mounted-unit-english-oak