I KNURLED HANDLE -



PRODUCT INFORMATION

Finish:	Brushed Bronze (PVD)
Height:	137mm
Width:	57mm
Depth:	46mm
Material	Brass
Weight	1.45kg

Product Code: CODK01.KBR

DESCRIPTION

A premium hot & cold douche kit, designed with durability in mind. Featuring an 80cm flexible hose, wall bracket, and your choice of handle design – Classic, Fluted, or Knurled – in five long-lasting PVD finishes: Chrome, Brushed Brass, Brushed Nickel, Brushed Bronze, and Satin Black.

TECHNICAL DRAWING

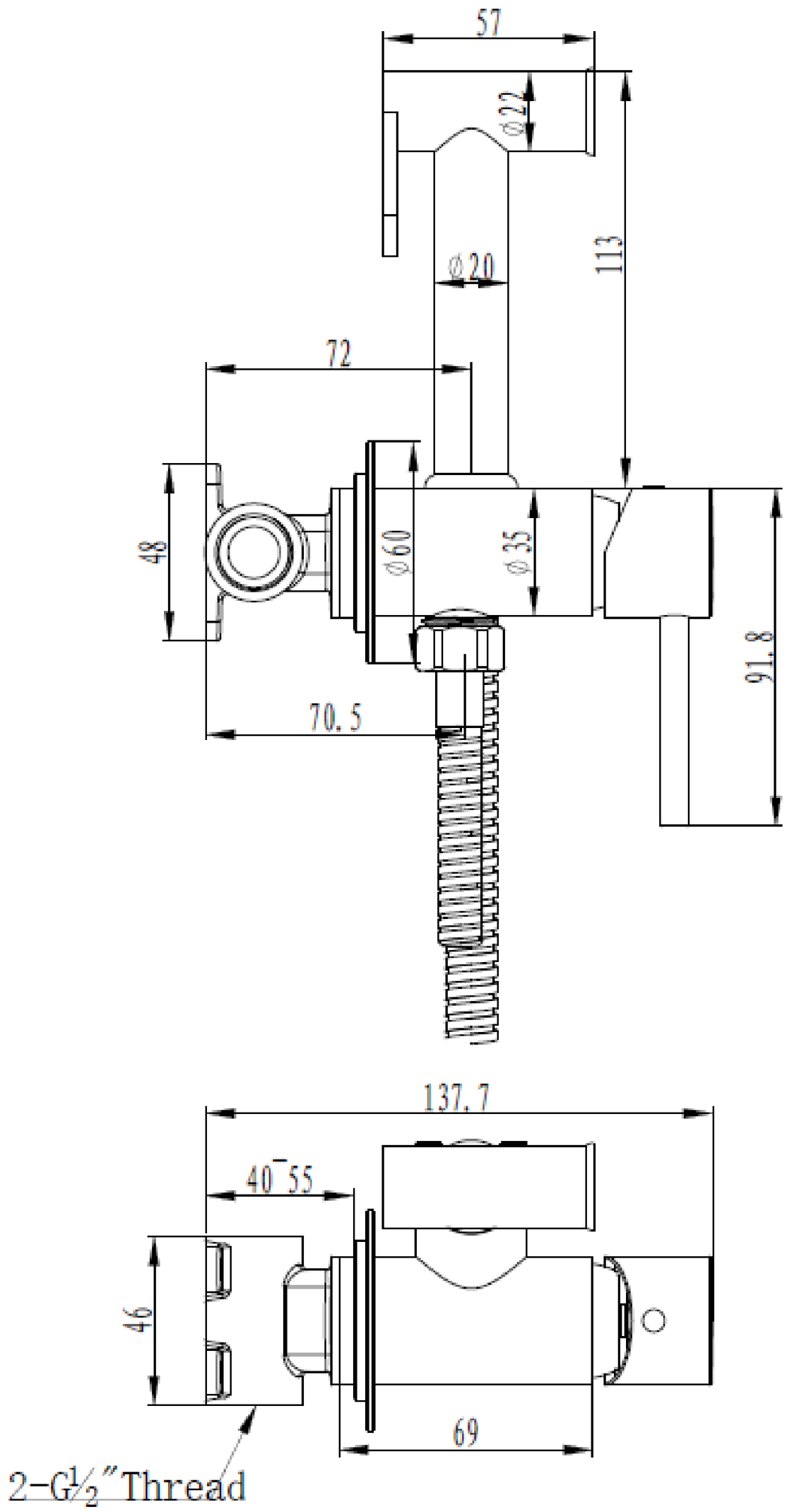

Saneux reserves the right to alter the specifications and product range without prior notice. Dimensions are given as a guide only. Dimensions should not be used for surrounding furniture, fixtures and fittings until the product is on site.