CLASSIC HANDLE - BRUSHED



PRODUCT INFORMATION

Finish:	Brushed Bronze (PVD)
Height:	137mm
Width:	57mm
Depth:	46mm
Material	Brass
Weight	1.45kg
Guarantee	15 years

Product Code: CODK01.BR

DESCRIPTION

A premium hot & cold douche kit, designed with durability in mind. Featuring an 80cm flexible hose, wall bracket, and your choice of handle design – Classic, Fluted, or Knurled – in five long-lasting PVD finishes: Chrome, Brushed Brass, Brushed Nickel, Brushed Bronze, and Satin Black.

TECHNICAL DRAWING

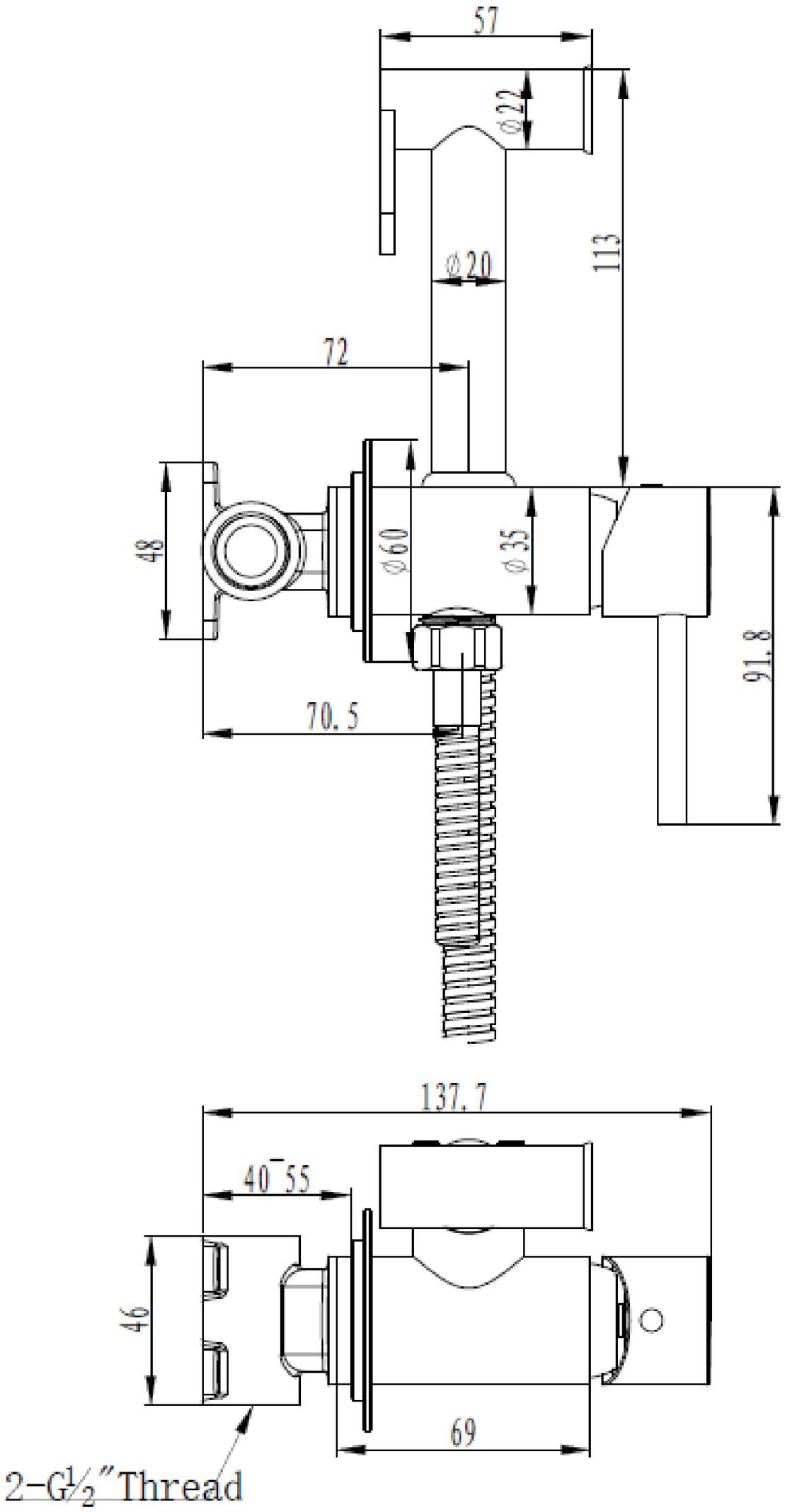

FLOW RATE

- 0.1 Bar - Flowrate: 0.13 l/min
- 0.2 Bar - Flowrate: 0.15 l/min
- 0.5 Bar - Flowrate: Yes l/min
- 1 Bar - Flowrate: 4.1 l/min
- 2 Bar - Flowrate: 7.4 l/min
- 3 Bar - Flowrate: 9.6 l/min
- 5 Bar - Flowrate: 13.7 l/min

Saneux reserves the right to alter the specifications and product range without prior notice. Dimensions are given as a guide only. Dimensions should not be used for surrounding furniture, fixtures and fittings until the product is on site.