AUSTEN 60CM 2 DOOR FLOOR STANDING UNIT - MATTE WHITE



Product Code: AU060F.MW

PRODUCT INFORMATION

Finish:	Matte White
Height:	780mm
Width:	596mm
Depth:	445mm
Material	MFC
Weight	21.4kg
Shelf Quantity	1x wooden shelf
Guarantee	5 years
Configuration	2 Door
Door Type	Soft close
Compatible Basin(s)	50010, 50010.0TH
Compatible Countertop(s)	AU060T.GW, AU060T.IG, AU060T.MW, AU060T.EO, AU060T.MC, AU060T.C
Handle(s) Required	2, purchase separately
Other Features	Easy installation Quick release doors

DESCRIPTION

AUSTEN was designed to provide you with the best quality bathroom products that offer a luxury style. The collection offers the complete package with washbasins, vanity units, WC units, side units, mirror cabinets, and toilets so you can create a complete bathroom that will look timeless for years to come.

This 60cm 2 door floor standing unit in the matte white finish provides plenty of storage space for your bathroom and it can be paired with either a countertop or a basin. The matte white finish is a lovely option if you want to have a classic and contemporary mix for your bathroom.

*Basin to be purchased separately
Compatible basins: 50010, 50010.0TH

**Handles to be purchased separately

TECHNICAL DRAWING

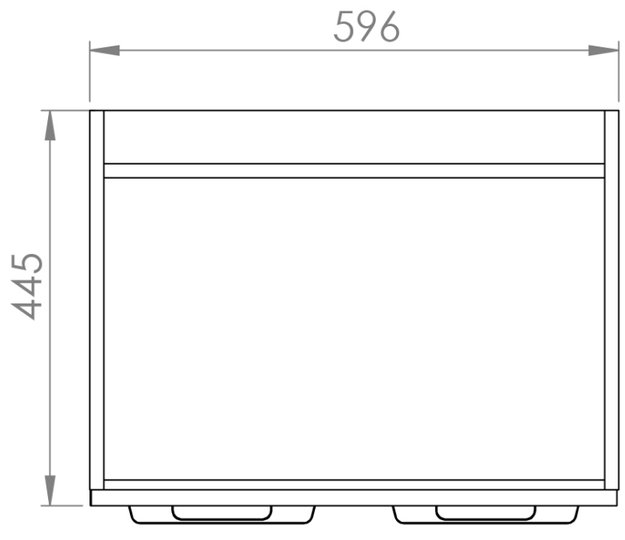

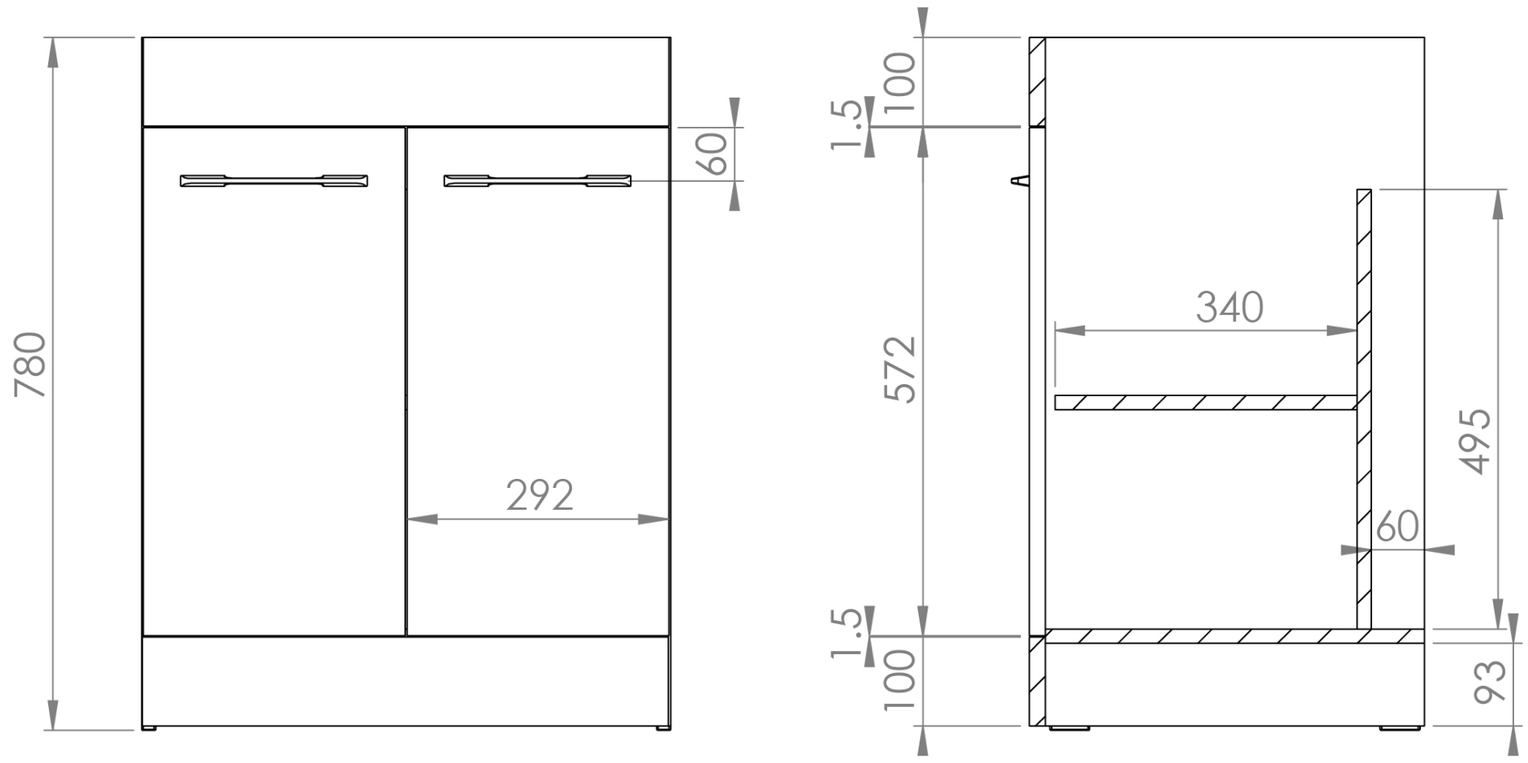

Saneux reserves the right to alter the specifications and product range without prior notice. Dimensions are given as a guide only. Dimensions should not be used for surrounding furniture, fixtures and fittings until the product is on site.

https://saneux.com/products/austen-60cm-2-door-floor-standing-unit-matte-white