COS 2 WAY THERMOSTATIC SHOWER RING VALVE KIT - W/ FLUTED HANDLE & HANDSET - LANDSCAPE -

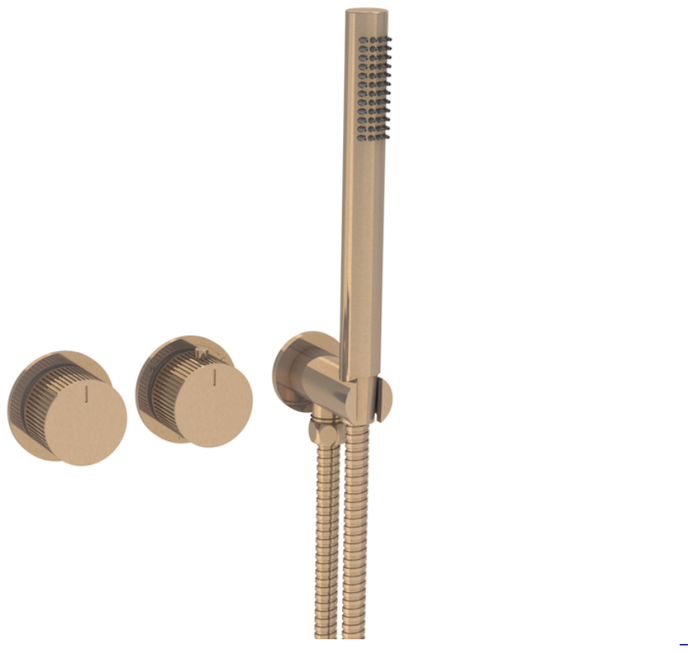

PRODUCT INFORMATION

Finish:	Brushed Bronze (PVD)
Outlets:	2 Outlets
Material	Brass
Guarantee	5 years
Outlets	2

Product Code: CO320LRV.H.FBR

TECHNICAL DRAWING

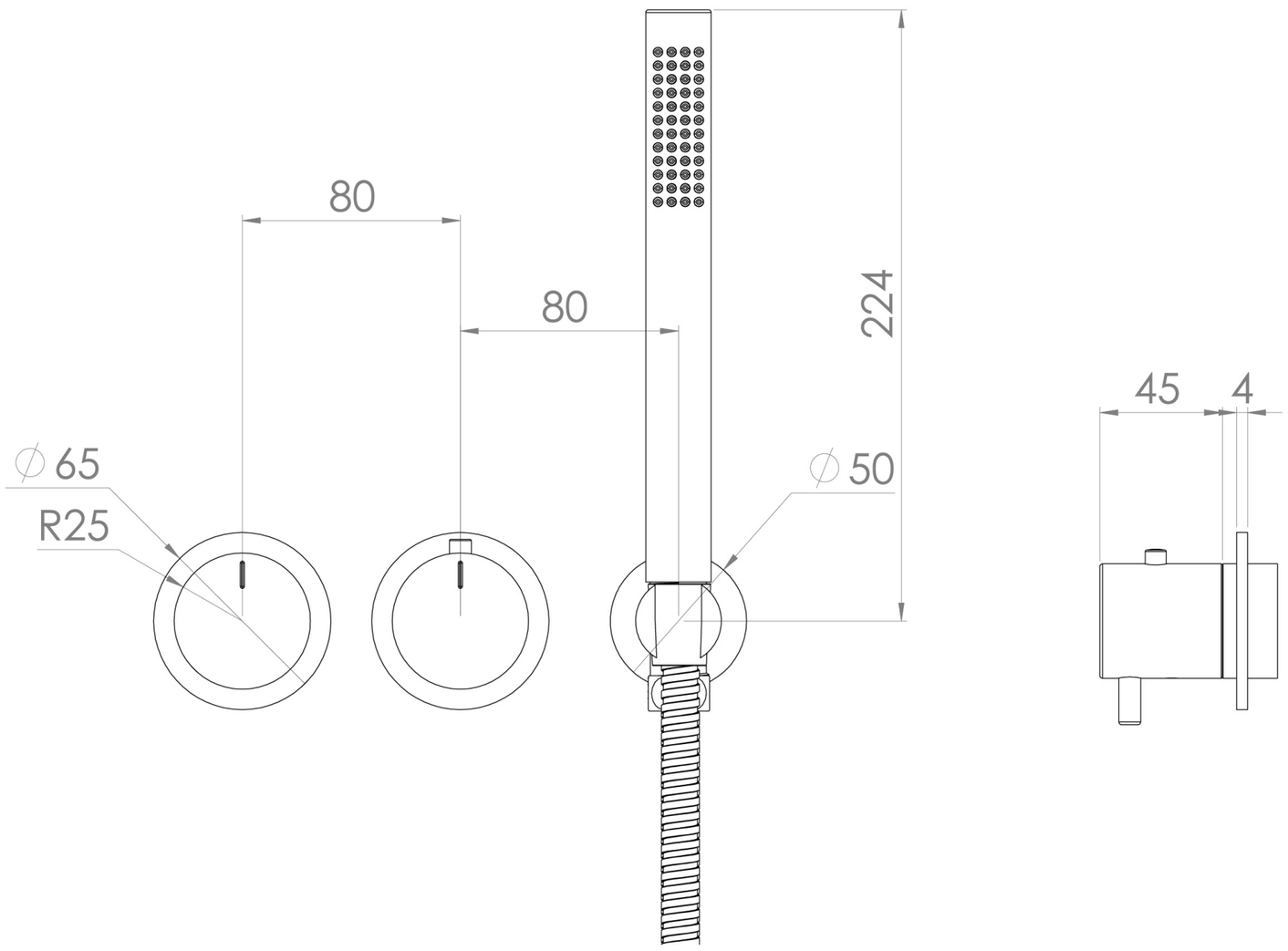

FLOW RATE

- 0.5 Bar - Flowrate: 7.8 l/min
- 1 Bar - Flowrate: 16 l/min
- 2 Bar - Flowrate: 22.5 l/min
- 3 Bar - Flowrate: 28.5 l/min
- 5 Bar - Flowrate: 24.2 l/min

Saneux reserves the right to alter the specifications and product range without prior notice. Dimensions are given as a guide only. Dimensions should not be used for surrounding furniture, fixtures and fittings until the product is on site.