COS 1 WAY THERMOSTATIC SHOWER VALVE KIT W/ CHROME

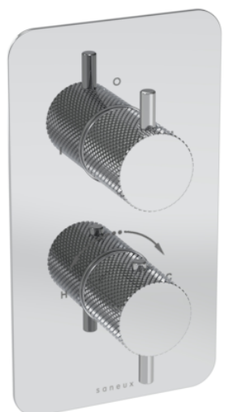

PRODUCT INFORMATION

Height:	215mm
Width:	120mm
Finish:	Chrome
Guarantee	5 years
Outlets	Yes

Product Code: CO319.K

DESCRIPTION

This thermostatic valve has 1 outlet which allows it to control either a shower head, a shower handset, or a bath filler. The top handle turns the component on and off, and the bottom handle controls the water temperature.

It offers three distinct handle options—Classic, Knurled, and Fluted—each available in five stunning finishes: Chrome, Brushed Brass, Brushed Bronze, Brushed Nickel, and Satin Black.

The colored finishes utilize a PVD coating, ensuring superior quality and long-lasting durability.

*WRAS Approved valve

TECHNICAL DRAWING

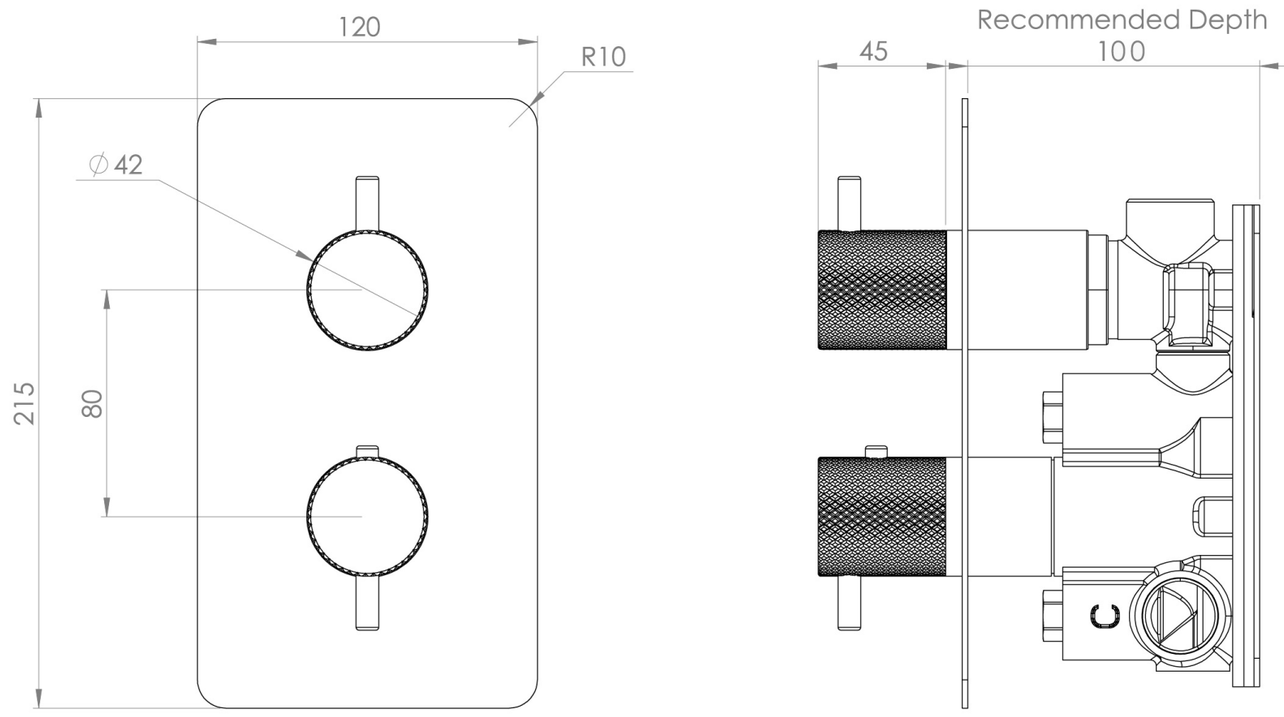

FLOW RATE

- 0.5 Bar - Flowrate: 10.7 l/min
- 1 Bar - Flowrate: 21 l/min
- 2 Bar - Flowrate: 28.5 l/min
- 3 Bar - Flowrate: 35 l/min
- 5 Bar - Flowrate: 32.7 l/min

Saneux reserves the right to alter the specifications and product range without prior notice. Dimensions are given as a guide only. Dimensions should not be used for surrounding furniture, fixtures and fittings until the product is on site.