

ERTOP WASHBASIN

PRODUCT INFORMATION

Finish:	Gloss White
Height:	140mm
Width:	320mm
Depth:	320mm
Material	Ceramic
Weight	3.5kg
Tap Holes	0 Tap Hole
Recommended Waste Required	Unslotted waste
Furniture Required For Installation?	Yes
Guarantee	Lifetime
Other Features	Pair with a wall mounted basin mixer tap or a tall basin mixer tap

Product Code: 50018

DESCRIPTION

AUSTEN was designed to provide you with the best quality bathroom products that offer a luxurious yet classic style that will stand the test of time.

This AUSTEN 32cm round countertop washbasin will look sleek on smaller countertops as it will still allow for countertop space, combining form and function perfectly.

*No overflow

TECHNICAL DRAWING

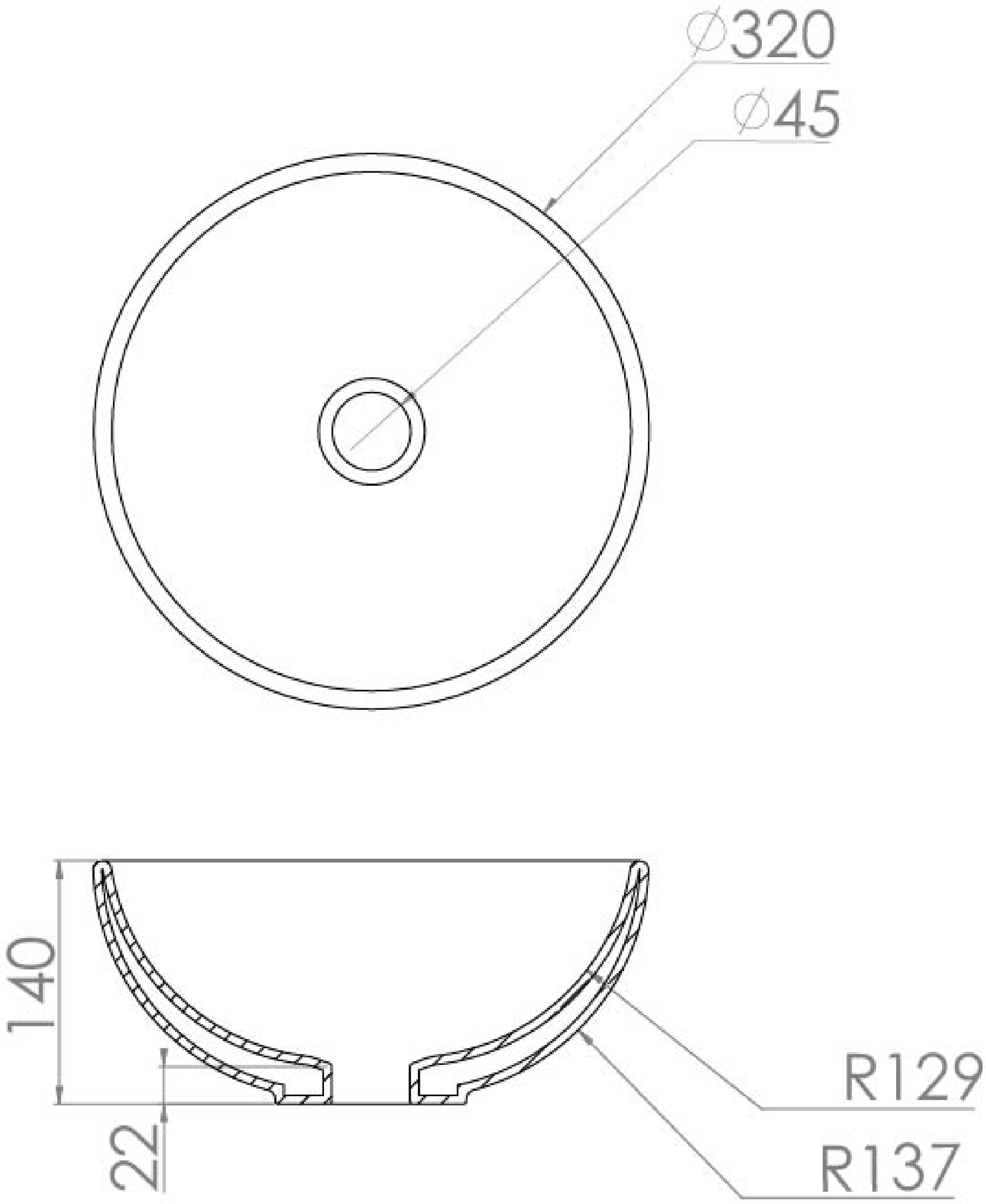

Saneux reserves the right to alter the specifications and product range without prior notice. Dimensions are given as a guide only. Dimensions should not be used for surrounding furniture, fixtures and fittings until the product is on site.

https://saneux.com/products/austen-32cm-countertop-washbasin