EMBER 1000X500MM PRE-FILLED TOWEL RAIL - BRUSHED NICKEL



Product Code: EM1005.FBN

PRODUCT INFORMATION

Finish:	Brushed Nickel (PVD)
Height:	1000mm
Width:	500mm
Depth:	72mm
Material	Stainless Steel
Weight	9.36kg
Guarantee	5 years
IP Rating	IP44
Voltage (V)	220-240v
WATTS - T 50 (W)	300W
Horizontal Bar Count	14
Max Working Temperature (°C)	70°C
Zone Suitability	Zone 2

DESCRIPTION

The EMBER 500x1000mm pre-filled towel rail & heating element in brushed brass is certainly a stand out piece to have featured in your bathroom.

It has 14 bars so you can display a couple of towels to keep them warm, and it has a clean, minimalist design so that it can work in modern interiors. It also comes with an integrated heating element.

It has a PVD finish, a durable finish that will continuously look flawless for years to come.

TECHNICAL DRAWING

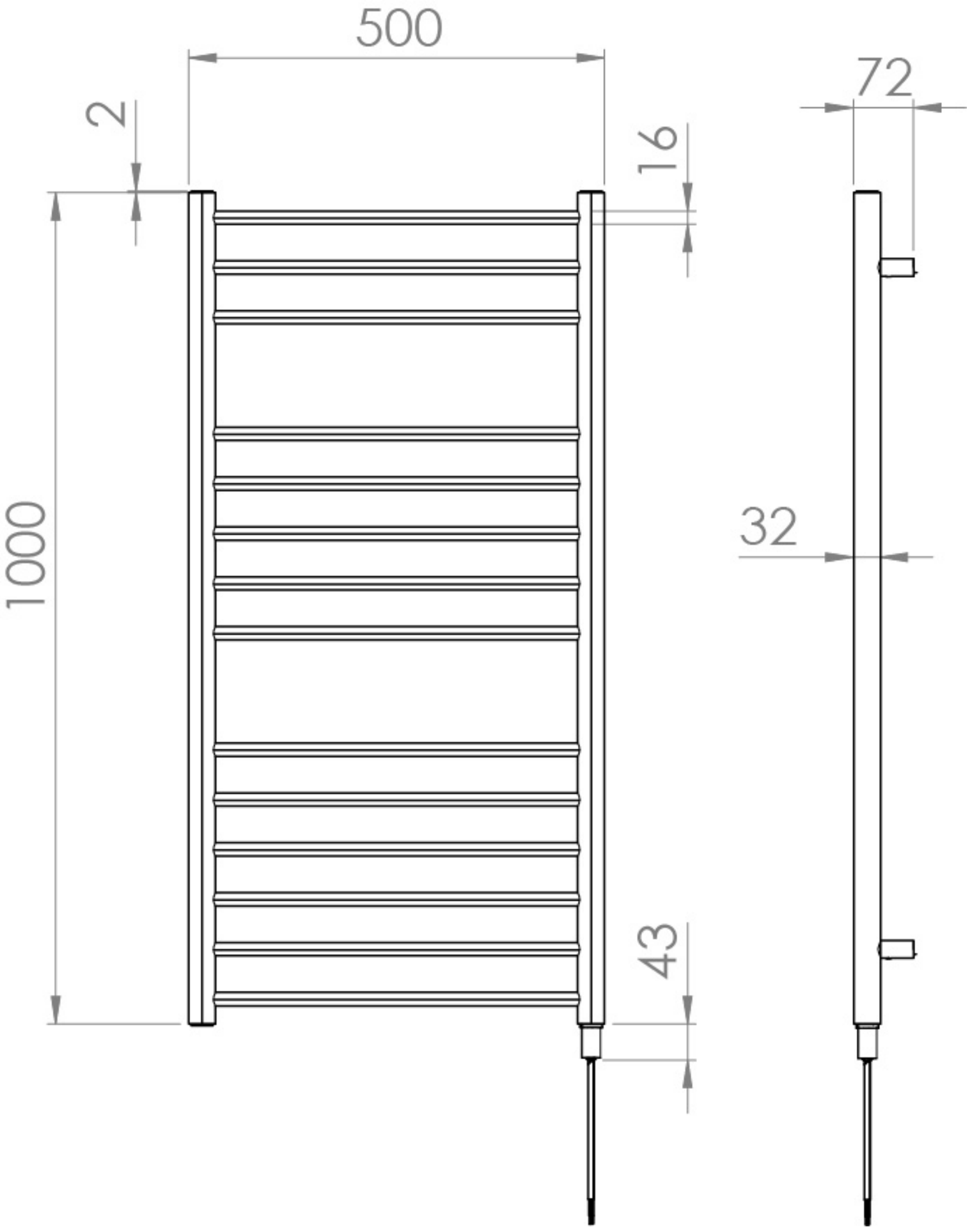

Saneux reserves the right to alter the specifications and product range without prior notice. Dimensions are given as a guide only. Dimensions should not be used for surrounding furniture, fixtures and fittings until the product is on site.

https://saneux.com/products/ember-1000x500mm-pre-filled-towel-rail-brushed-nickel