MONUMENT 80CM KIT - 60CM 1 DRAWER WALL M SPACERS - MATTE BLACK

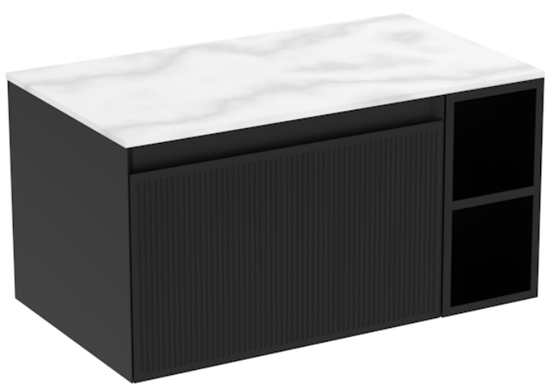

PRODUCT INFORMATION

Finish: Matte Black

Product Code: MO080W1.S.MB

DESCRIPTION

Influenced by Sir Christopher Wren and Dr. Robert Hooke's commemoration of the Great Fire of 1666, Monument furniture pays homage to London's rich history. The furniture echoes the fluting found on the Monument column at Fish St Hill, London EC3R.

Experience versatility with our innovative design: pair any 60cm or 80cm unit with a 20cm spacer unit and a countertop, enabling you to create your perfect basin setup.

Parts to be purchased separately: 1 x MO060W1.MB, 1 x UNI020S.MB & 1 x UNI080T.C

*Compatible with countertop only.

TECHNICAL DRAWING

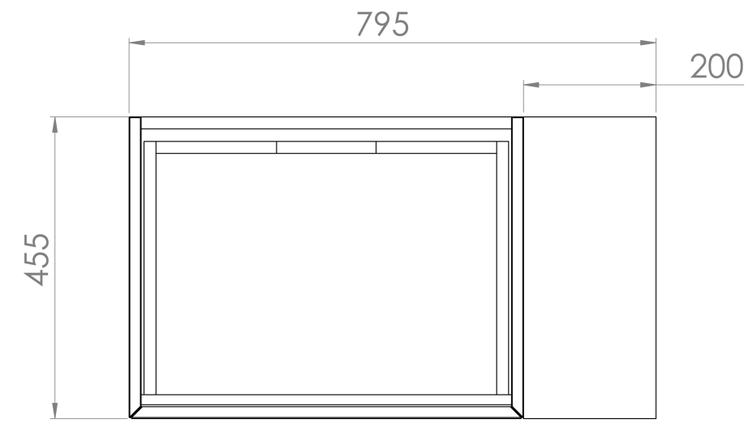

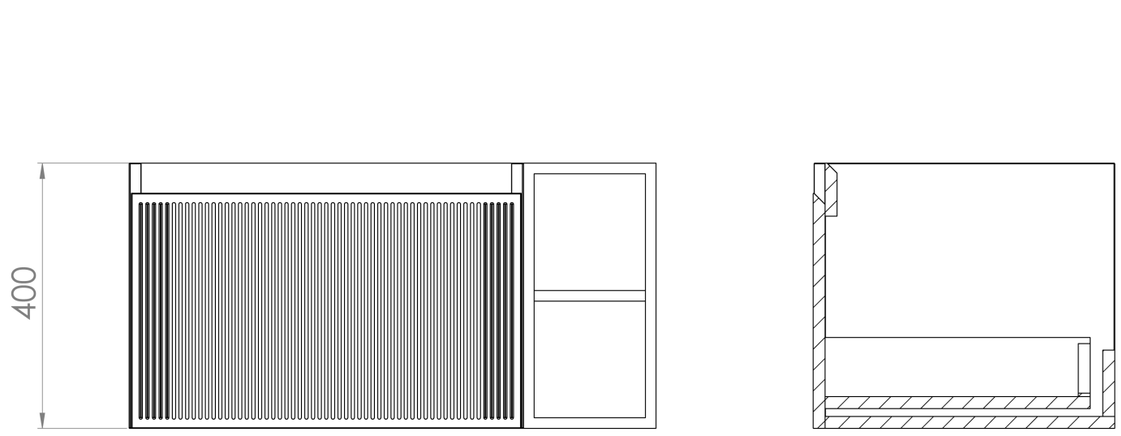

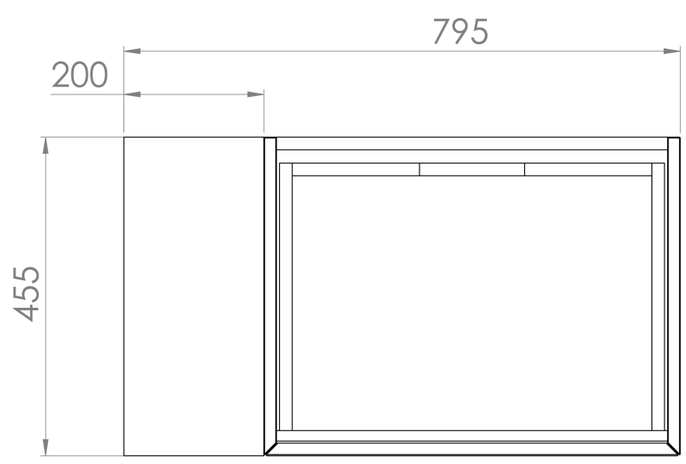

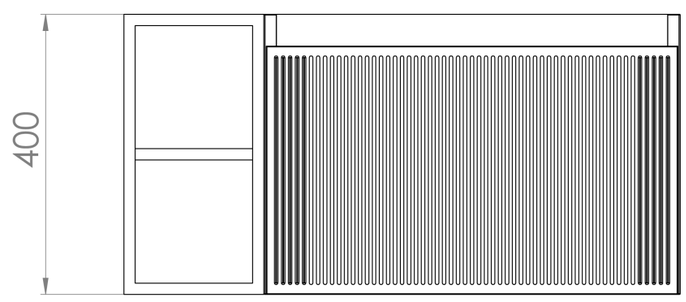

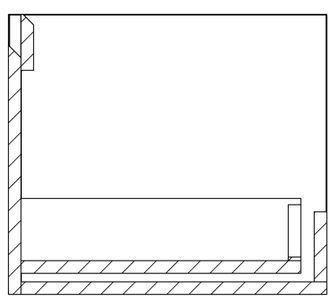

Saneux reserves the right to alter the specifications and product range without prior notice. Dimensions are given as a guide only. Dimensions should not be used for surrounding furniture, fixtures and fittings until the product is on site.