UNI 80CM KIT - 60CM 1 DRAWER WALL MOUNTED - MATTE WHITE



PRODUCT INFORMATION

Finish: Matte White

Product Code: UNI080W1.S.MW

DESCRIPTION

UNI is our collection of modern, handle-less furniture and ceramics to allow you to create a contemporary bathroom set up.

Experience versatility with our innovative design: pair any 60cm, 80cm or 100cm unit with a 20cm spacer unit and a countertop, enabling you to create your perfect basin setup.

Parts to be purchased separately.

*Compatible with countertop only.

TECHNICAL DRAWING

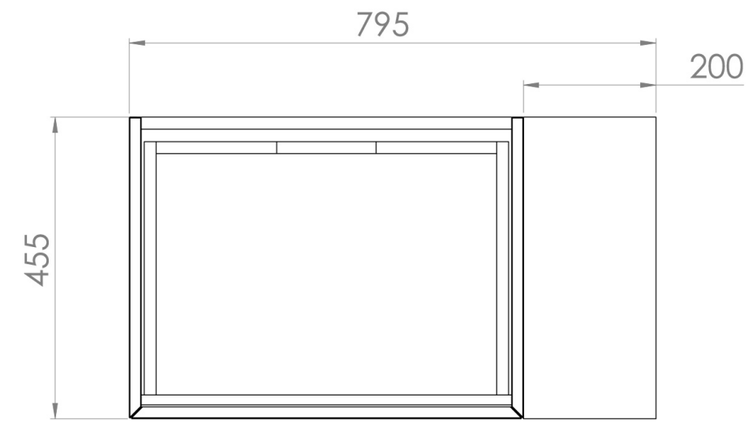

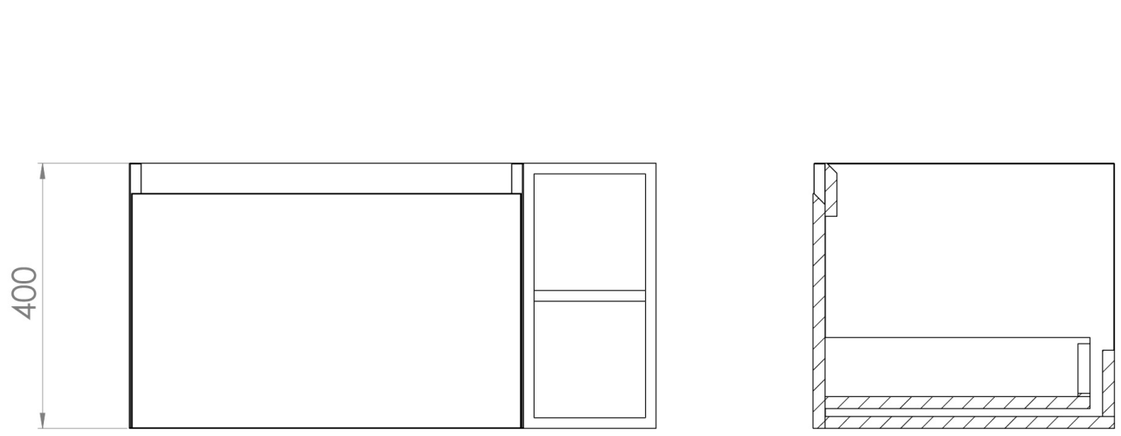

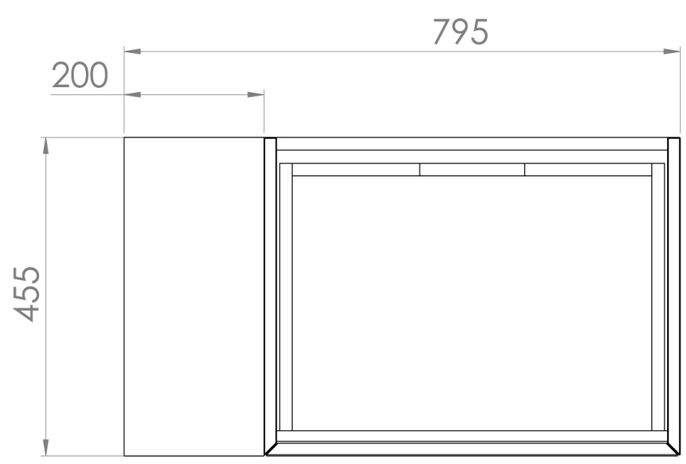

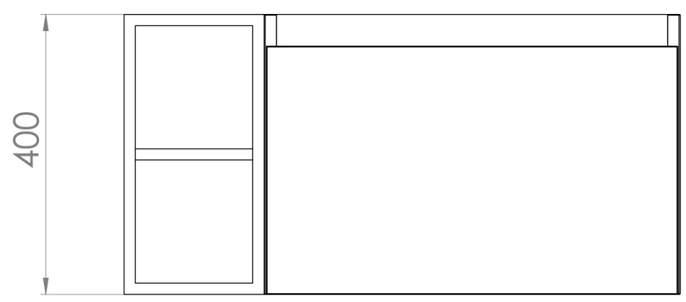

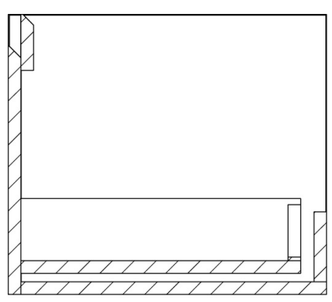

Saneux reserves the right to alter the specifications and product range without prior notice. Dimensions are given as a guide only. Dimensions should not be used for surrounding furniture, fixtures and fittings until the product is on site.