COS 2 WAY THERMOSTATIC SHOWER RING VALVE KIT - W/ CLASSIC HANDLE - LANDSCAPE - BRUSHED

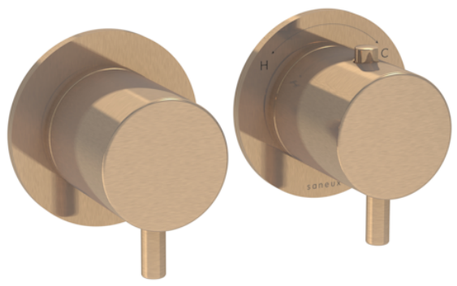

PRODUCT INFORMATION

Height:	65mm
Width:	145mm
Finish:	Brushed Bronze (PVD)
Material	Brass
Guarantee	5 years
Outlets	2

Product Code: CO320LRV.BR

DESCRIPTION

The COS 2-Way Thermostatic Ring Valve adds a touch of luxury to any shower or bathroom with its sleek, minimalist design. It features two outlets, allowing you to control a shower head and handset, a handset and bath filler, or a shower head and bath filler. The top handle manages the on/off function, while the bottom handle adjusts the temperature.

It can be installed portrait or landscape and offers three handle options—Classic, Knurled, and Fluted—in five finishes: Chrome, Brushed Brass, Brushed Bronze, Brushed Nickel, and Satin Black. The PVD-coated finishes ensure durability and high quality.

WRAS Approved Valve

TECHNICAL DRAWING

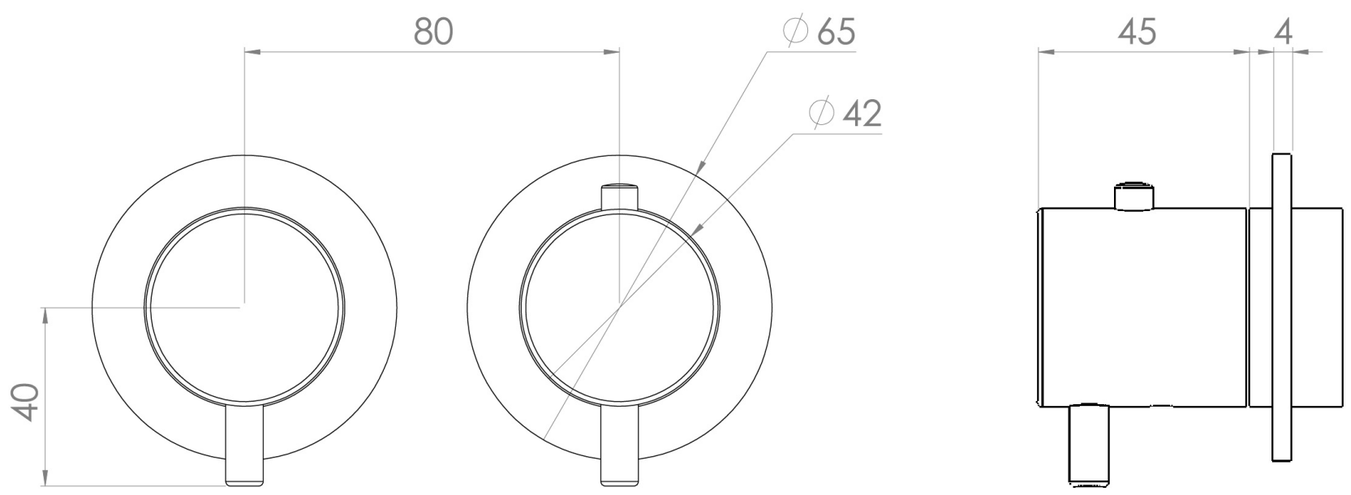

FLOW RATE

- 0.5 Bar - Flowrate: 7.8 l/min
- 1 Bar - Flowrate: 16 l/min
- 2 Bar - Flowrate: 22.5 l/min
- 3 Bar - Flowrate: 28.5 l/min
- 5 Bar - Flowrate: 24.2 l/min

Saneux reserves the right to alter the specifications and product range without prior notice. Dimensions are given as a guide only. Dimensions should not be used for surrounding furniture, fixtures and fittings until the product is on site.

https://saneux.com/products/cos-2-way-thermostatic-shower-ring-valve-kit-w-classic-handle-landscape-brushed-bronze