COS OVERFLOW & CLICKER WASTE - BRUSHED

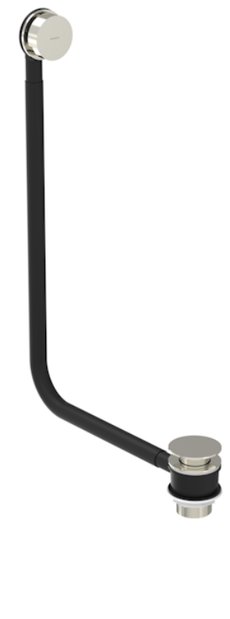

PRODUCT INFORMATION

Finish:	Brushed Nickel (PVD)
Material	Brass
Weight	0.56kg

Product Code: CO098.BN

DESCRIPTION

The COS collection was designed to create brassware that was both modern and classic to suit any style of bathroom.

This COS overflow and clicker waste is a great option for your bath if you have a separate bath filler or spout, and will perfectly match any of our built-in baths.

TECHNICAL DRAWING

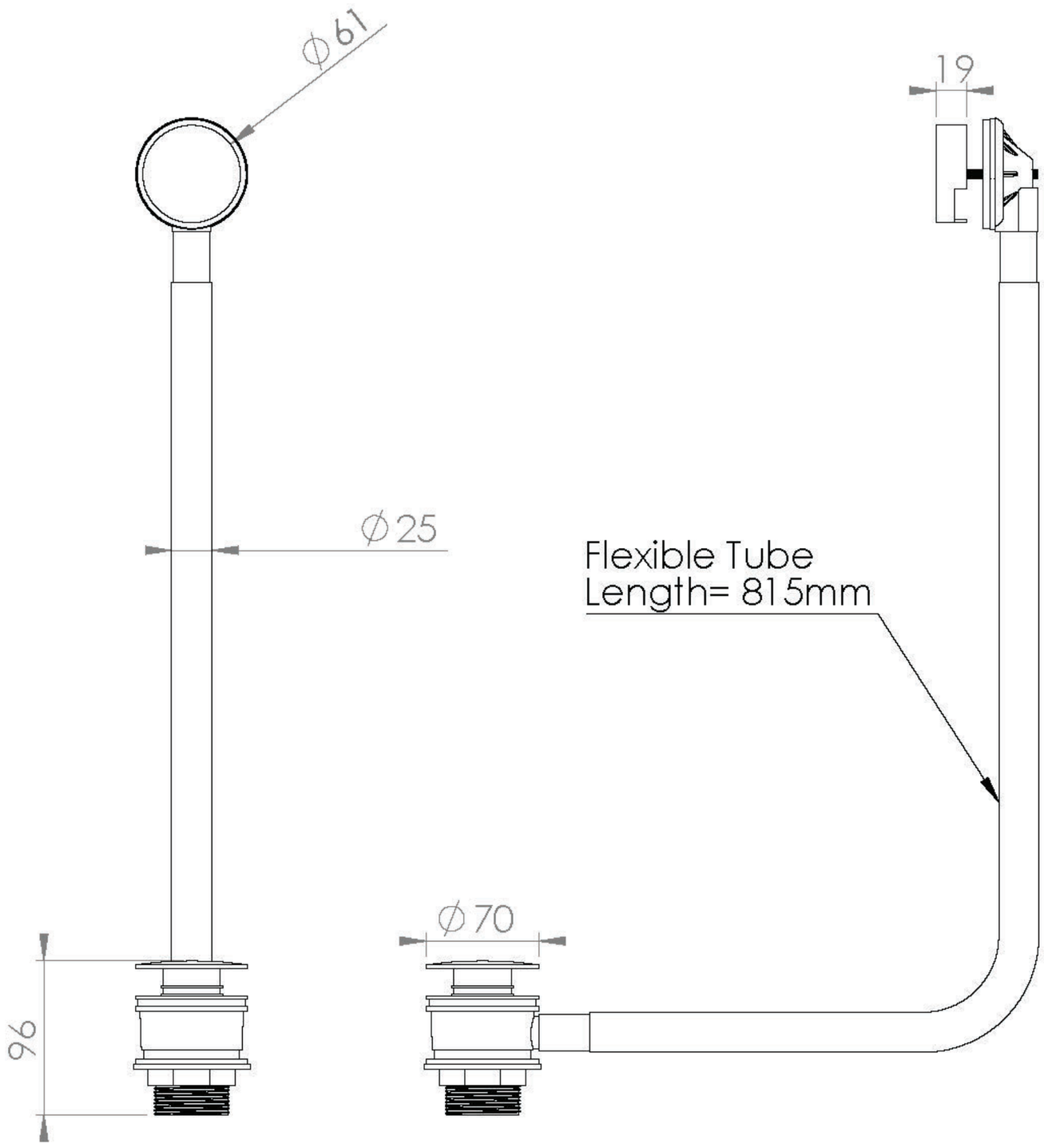

Saneux reserves the right to alter the specifications and product range without prior notice. Dimensions are given as a guide only. Dimensions should not be used for surrounding furniture, fixtures and fittings until the product is on site.

https://saneux.com/products/cos-overflow-clicker-waste-brushed-nickel