REESTANDING BATH

Product Code: 21105

PRODUCT INFORMATION

Finish:	Gloss White
Height:	570mm
Width:	1700mm
Depth:	800mm
Material	Acrylic
Weight	29kg
Waste	Built in waste & overflow
Guarantee	5 years
Overflow Height (Centre (mm))	75mm
Compatible Tap Types	Floor standing, Wall mounted
Capacity to Overflow (L)	314L

DESCRIPTION

The LOLA freestanding bath is characterised by its bold design with soft edges and minimalistic form.

The soft curved design will fit beautifully into any modern bathroom and will provide comfort for those long, relaxing soaks after a long day. With it being made of acrylic, it will also hold the heat well.

It has a minimalist overflow and comes with its own bath waste in chrome.

Pair it with a floor standing bath shower mixer, or a wall mounted bath spout & concealed thermostatic shower valve.

TECHNICAL DRAWING

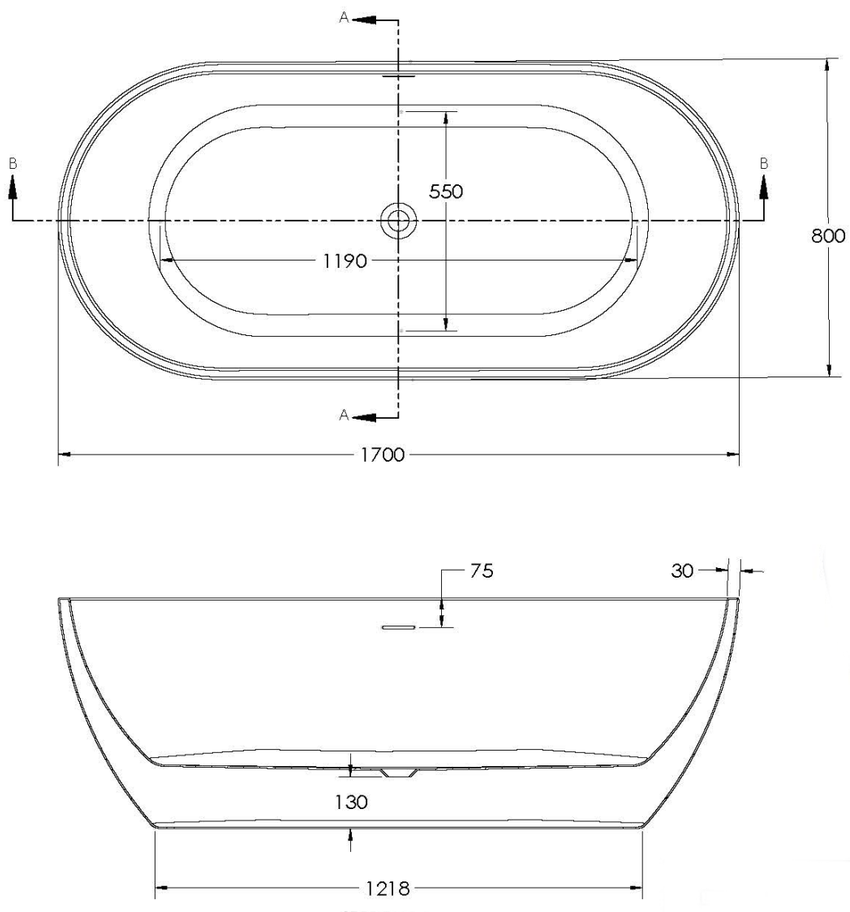

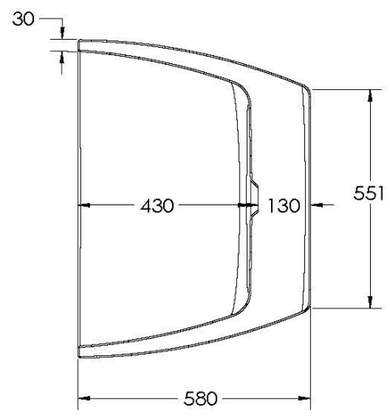

Saneux reserves the right to alter the specifications and product range without prior notice. Dimensions are given as a guide only. Dimensions should not be used for surrounding furniture, fixtures and fittings until the product is on site.

https://saneux.com/products/lola-1680x800mm-freestanding-bath