COS 3 WAY THERMOSTATIC SHOWER VALVE KIT - W/ ANDSCAPE - CHROME

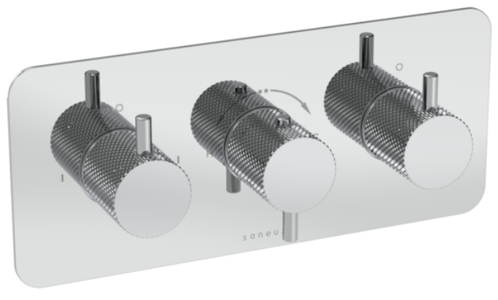

PRODUCT INFORMATION

Height:	120mm
Width:	275mm
Finish:	Chrome
Guarantee	5 years
Outlets	3

Product Code: CO321L.K

DESCRIPTION

The COS collection combines modern and classic styles for versatile bathroom brassware.

This landscape thermostatic valve features 3 outlets to control a shower head, handset, and bath filler. The left and right handles manage the on/off functions, while the middle handle adjusts the temperature.

Available with three handle styles—Classic, Knurled, and Fluted—and in five finishes: Chrome, Brushed Brass, Brushed Bronze, Brushed Nickel, and Satin Black. The PVD-coated finishes ensure durability.

WRAS Approved Valve

TECHNICAL DRAWING

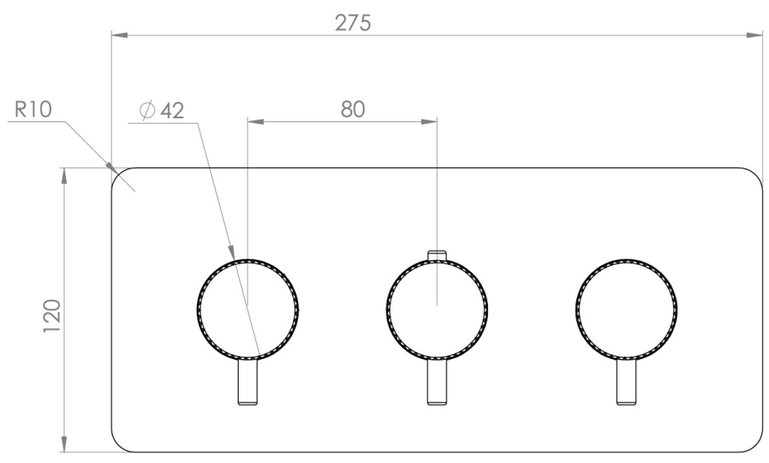

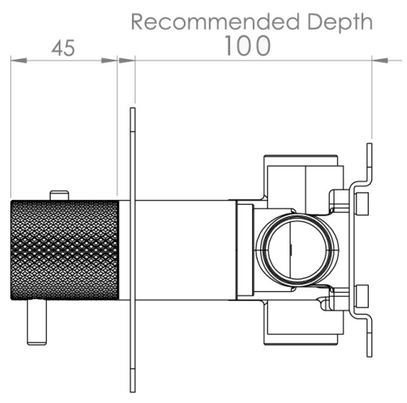

FLOW RATE

- 0.5 Bar - Flowrate: 7.8 l/min
- 1 Bar - Flowrate: 16 l/min
- 2 Bar - Flowrate: 22.5 l/min
- 3 Bar - Flowrate: 28.5 l/min
- 5 Bar - Flowrate: 24.2 l/min

Saneux reserves the right to alter the specifications and product range without prior notice. Dimensions are given as a guide only. Dimensions should not be used for surrounding furniture, fixtures and fittings until the product is on site.