# COS RIGID RISER KIT WITH 2 WAY DIVERTER OUTLET -

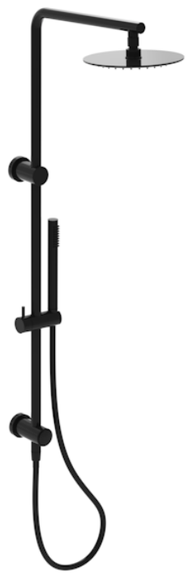

## PRODUCT INFORMATION

| | |
|---|---|
| **Finish:** | Satin Black (PVD) |
| **Guarantee** | 5 years |
| **Outlets** | 2 |
| **Other Features** | Paired with Saneux Concealed Valves (VB019 / VB020 / VB021 / VB022) |

**Product Code:** COSDP01.SB

## DESCRIPTION

Please note that this kit must be used with a concealed shower valve, which is sold separately.

## TECHNICAL DRAWING

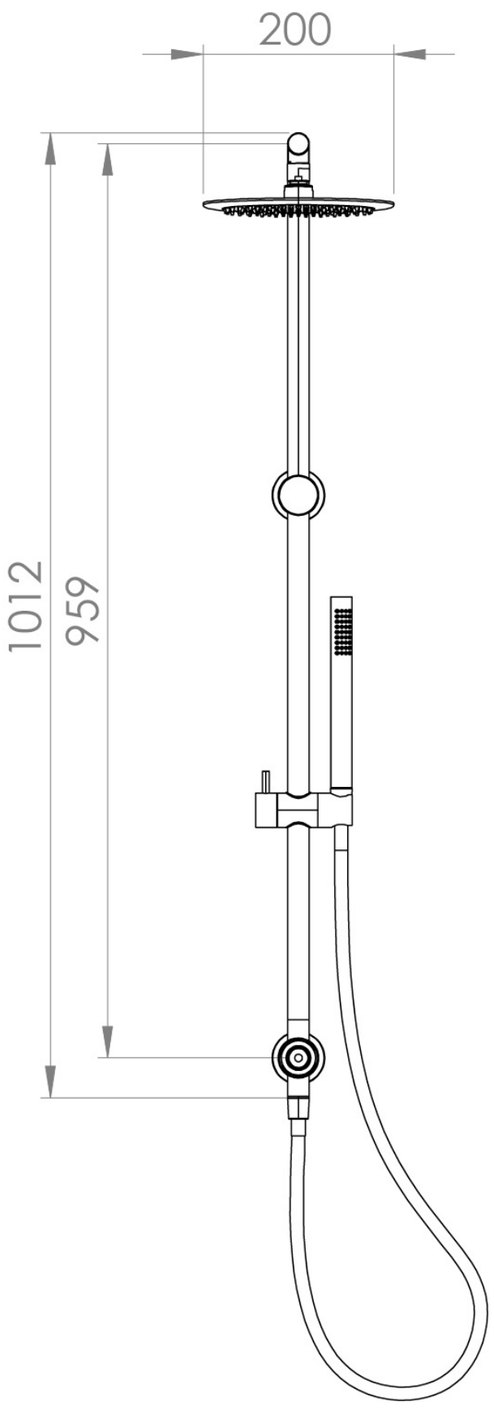


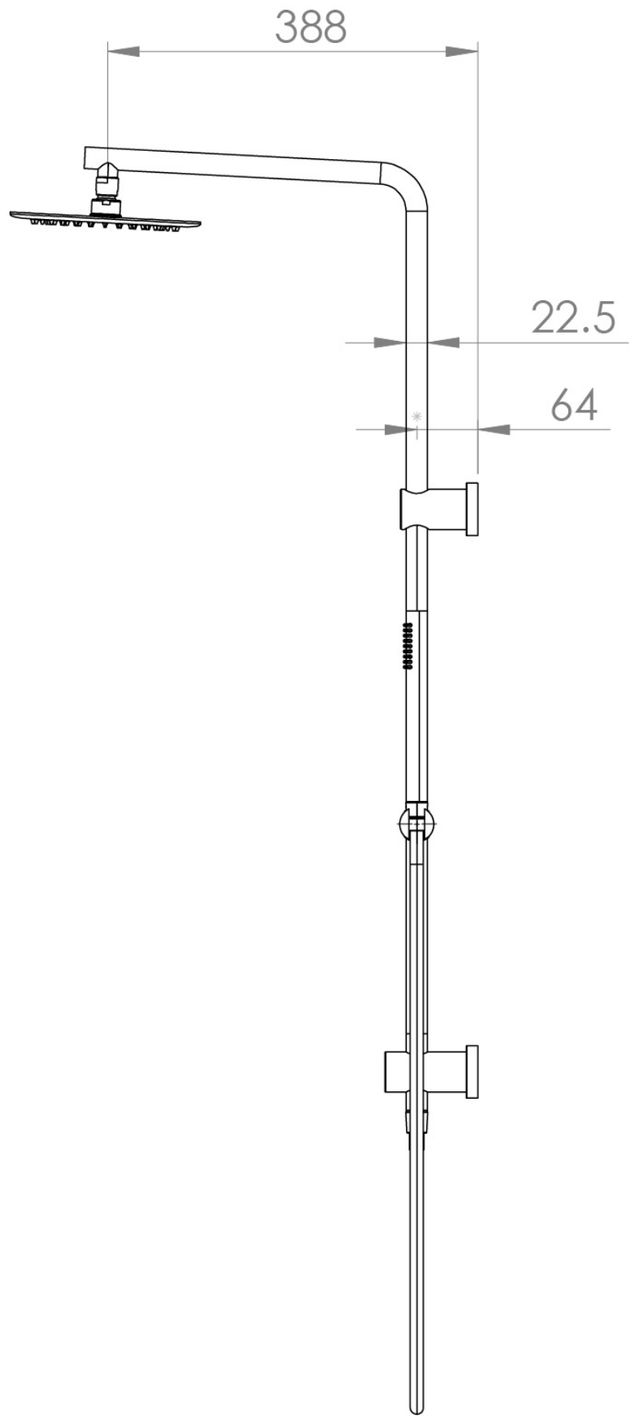


## FLOW RATE

- 1 Bar - Flowrate: 5.57 l/min
- 2 Bar - Flowrate: 7.23 l/min
- 3 Bar - Flowrate: 7.2 l/min
- 5 Bar - Flowrate: 8.57 l/min

Saneux reserves the right to alter the specifications and product range without prior notice. Dimensions are given as a guide only. Dimensions should not be used for surrounding furniture, fixtures and fittings until the product is on site.