COS RIGID RISER KIT WITH 2 WAY DIVERTER OUTLET -

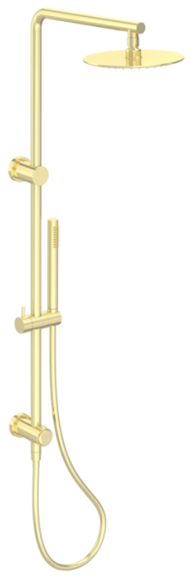

PRODUCT INFORMATION

Finish:	Brushed Brass (PVD)
Guarantee	5 years
Outlets	2
Other Features	Paired with Saneux Concealed Valves (VB019 / VB020 / VB021 / VB022)

Product Code: COSDP01.BB

DESCRIPTION

The Cos Rigid Riser Shower Kit, featuring a concealed outlet elbow and diverter, is available in a range of finishes: chrome, brushed brass, brushed bronze, brushed nickel, and satin black.

TECHNICAL DRAWING

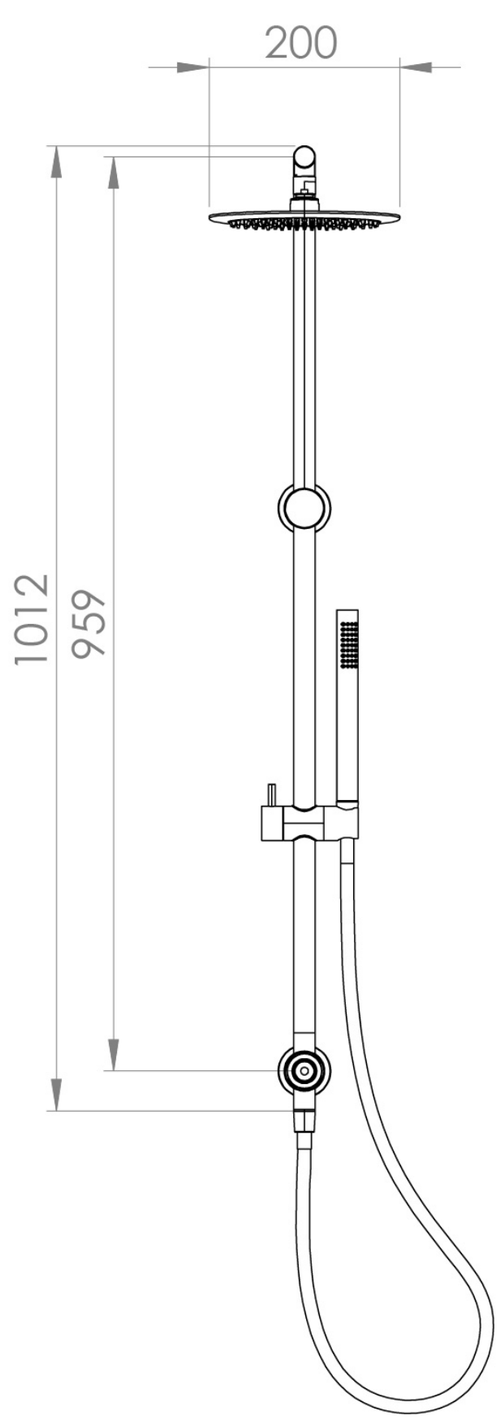

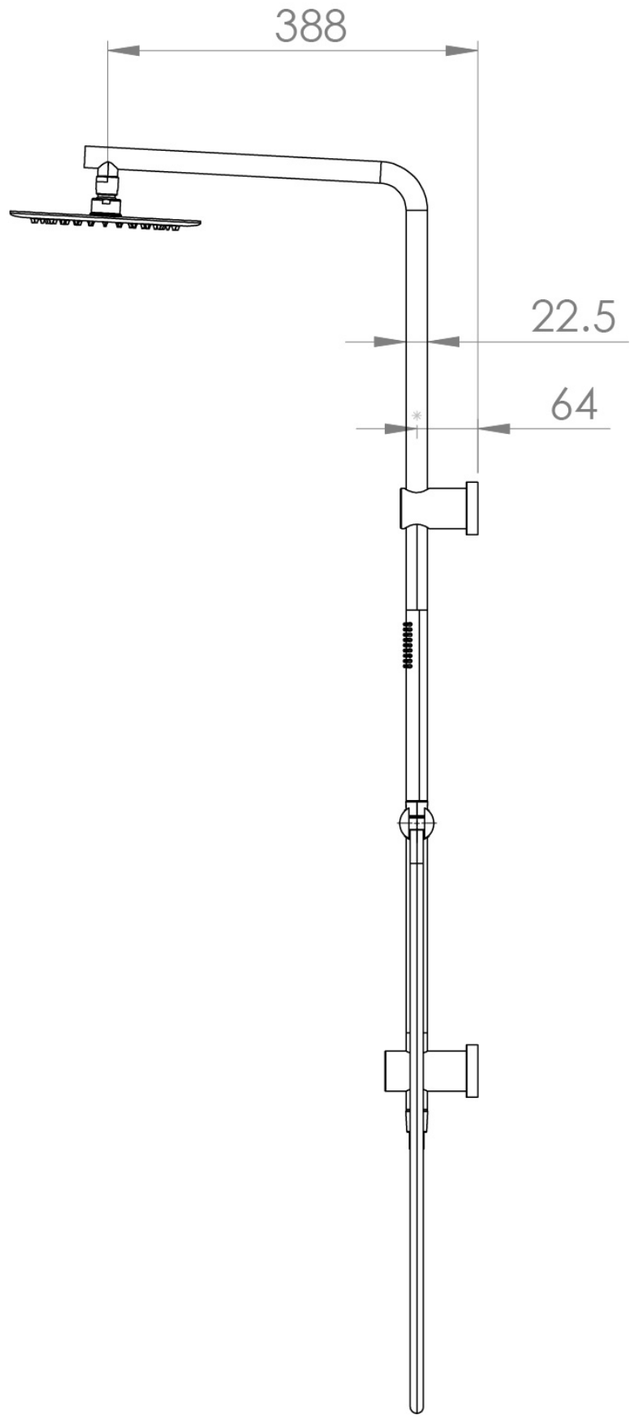

FLOW RATE

- 1 Bar - Flowrate: 5.57 l/min
- 2 Bar - Flowrate: 7.23 l/min
- 3 Bar - Flowrate: 7.2 l/min
- 5 Bar - Flowrate: 8.57 l/min

Saneux reserves the right to alter the specifications and product range without prior notice. Dimensions are given as a guide only. Dimensions should not be used for surrounding furniture, fixtures and fittings until the product is on site.