JSHED BRONZE

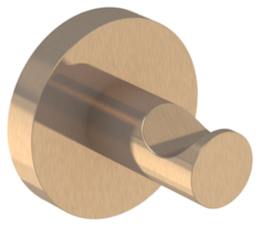

PRODUCT INFORMATION

Finish:	Brushed Bronze (PVD)
Height:	52mm
Width:	52mm
Depth:	50mm
Material	Brass
Weight	0.2kg

Product Code: CO190.BR

DESCRIPTION

The COS collection was designed to create brassware that was both modern and classic to suit any style of bathroom. The accessories will be the perfect finishing touches needed to complete your bathroom look.

Choose this robe hook in brushed bronze for a stylish and modern look whether its purpose be for hanging your bath robe or towels.

TECHNICAL DRAWING

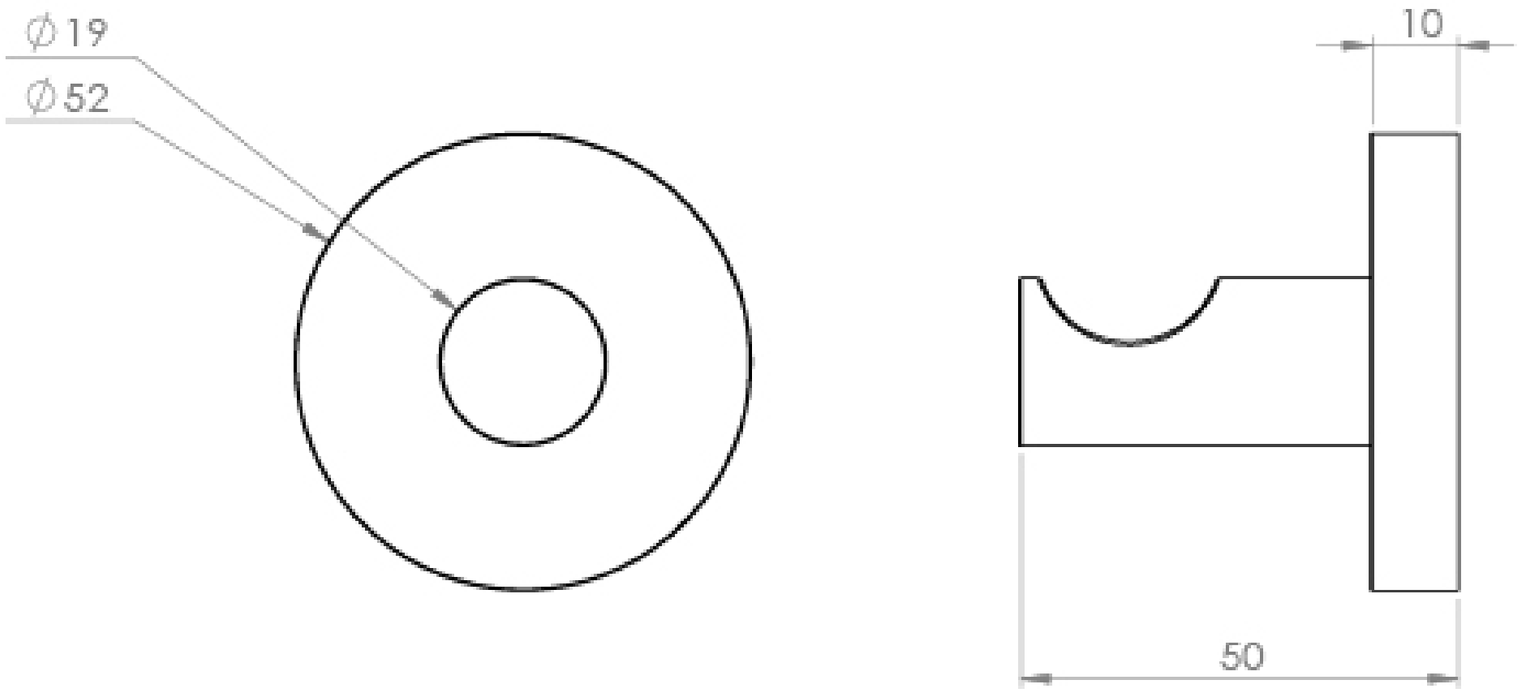

Saneux reserves the right to alter the specifications and product range without prior notice. Dimensions are given as a guide only. Dimensions should not be used for surrounding furniture, fixtures and fittings until the product is on site.