COS 2 PLATE WALL MOUNTED KIT - W/ SHORT SPOUT (130MM) W/ CLASSIC HANDLE - BRUSHED BRONZE (PVD)



Product Code: CO305S.BR

PRODUCT INFORMATION

Height:	103mm
Width:	155mm
Depth:	143mm
Finish:	Brushed Bronze (PVD)
Product Type:	Wall Mounted Basin Mixer Tap
Material	Brass
Waste	Not included, purchase separately
Guarantee	5 years
Spout Projection (mm)	133

DESCRIPTION

The new Cos basin mixer collection showcases a sleek, streamlined body with an intricately designed spout. It offers three distinct handle options—Classic, Knurled, and Fluted—each available in five stunning finishes: Chrome, Brushed Brass, Brushed Bronze, Brushed Nickel, and Satin Black.

The colored finishes utilize a PVD coating, ensuring superior quality and long-lasting durability.

This wall-mounted basin mixer is available with short, standard, and long spouts, and is designed for use with a basin that has a 0 tap hole or a sit-on basin.

Waste to be purchased separately.

TECHNICAL DRAWING

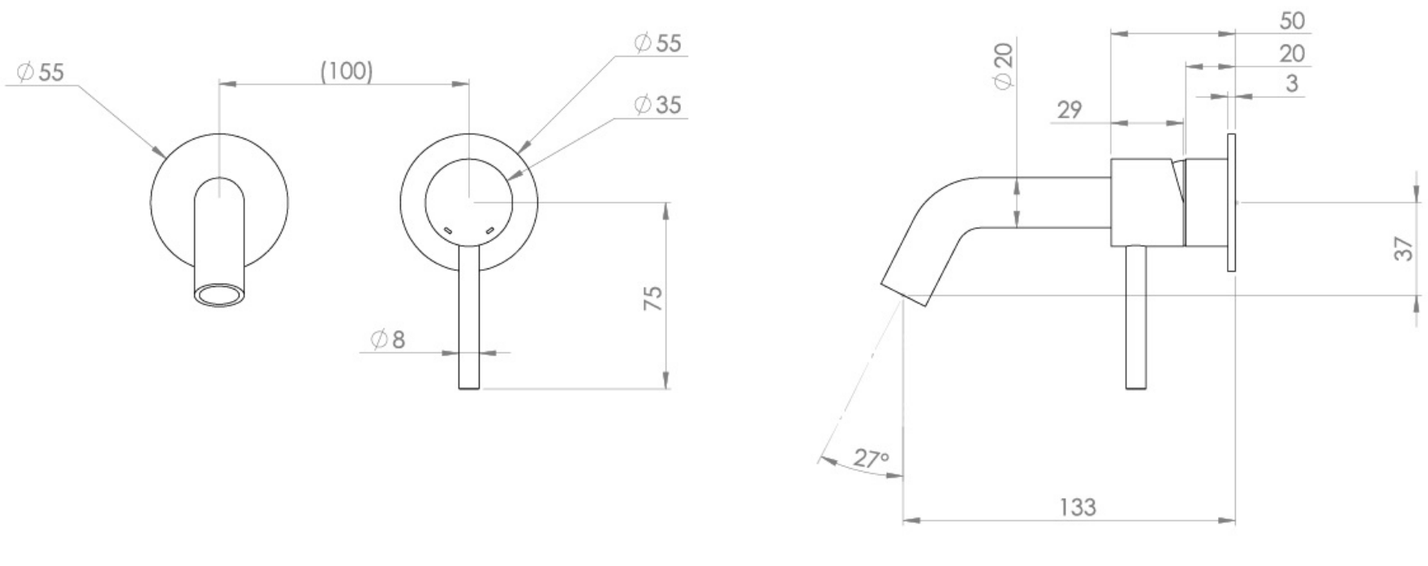

FLOW RATE

- 1 Bar - Flowrate: 3.9 l/min
- 2 Bar - Flowrate: 4.18 l/min
- 3 Bar - Flowrate: 4.18 l/min
- 5 Bar - Flowrate: 4.69 l/min

Saneux reserves the right to alter the specifications and product range without prior notice. Dimensions are given as a guide only. Dimensions should not be used for surrounding furniture, fixtures and fittings until the product is on site.

https://saneux.com/products/cos-2-plate-wall-mounted-kit-w-short-spout-130mm-w-classic-handle-brushed-bronze-pvd