COS BASIN MIXER KIT - W/ CLASSIC HANDLE - SATIN BLACK (PVD)



Product Code: CO301.SB

PRODUCT INFORMATION

Height:	160mm
Width:	50mm
Depth:	148mm
Finish:	Satin Black (PVD)
Product Type:	Deck Mounted Basin Mixer Tap, Single Lever Basin Mixer
Material	Brass
Waste	Not included, purchase separately
Guarantee	5 years
Spout Projection (mm)	130

DESCRIPTION

The new Cos basin mixer collection showcases a sleek, streamlined body with an intricately designed spout. It offers three distinct handle options—Classic, Knurled, and Fluted—each available in five stunning finishes: Chrome, Brushed Brass, Brushed Bronze, Brushed Nickel, and Satin Black.

The coloured finishes employ a PVD coating, guaranteeing superior quality and lasting durability.

This basin mixer features single-lever operation and includes flow regulators as standard, allowing you to save on water. It comes with a 15-year guarantee, giving you peace of mind that your bathroom taps are designed to stand the test of time.

TECHNICAL DRAWING

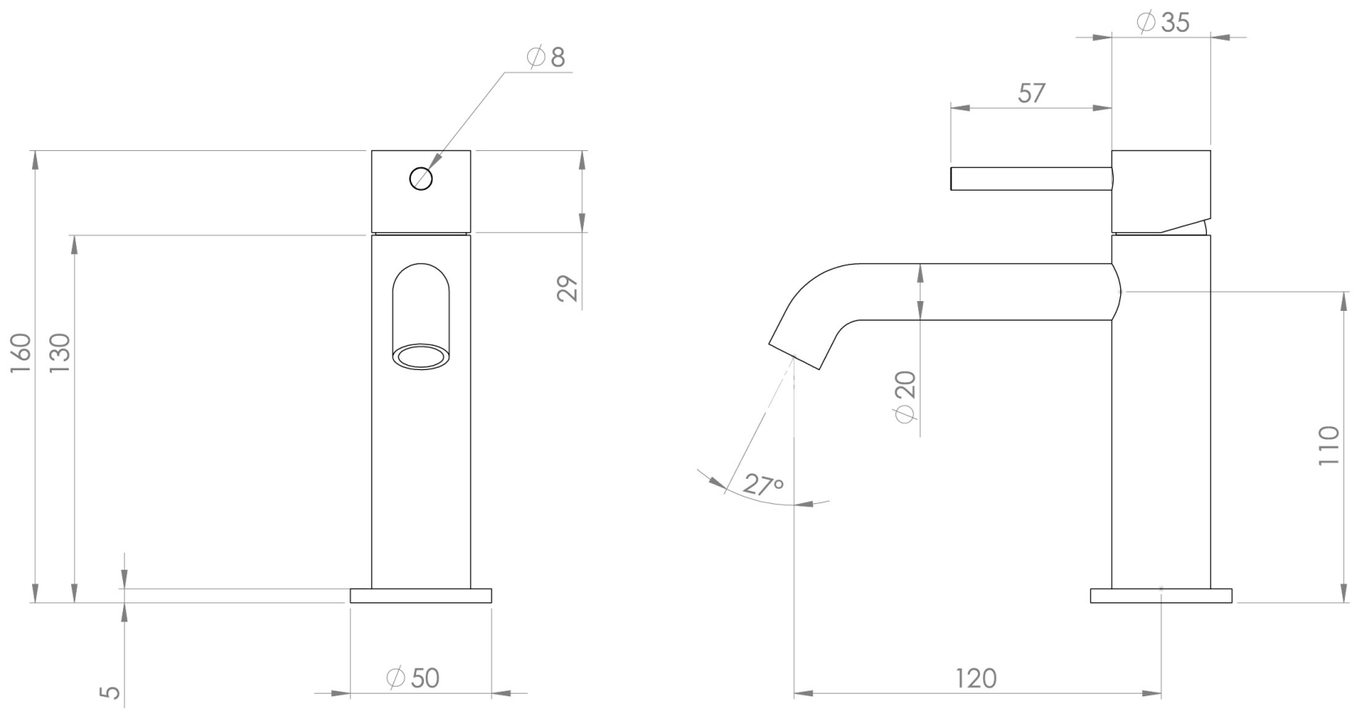

FLOW RATE

- 1 Bar - Flowrate: 3.82 l/min
- 2 Bar - Flowrate: 5.04 l/min
- 3 Bar - Flowrate: 4.64 l/min
- 5 Bar - Flowrate: 4.57 l/min

Saneux reserves the right to alter the specifications and product range without prior notice. Dimensions are given as a guide only. Dimensions should not be used for surrounding furniture, fixtures and fittings until the product is on site.

https://saneux.com/products/cos-basin-mixer-kit-w-classic-handle-satin-black-pvd