# COS BASIN MIXER KIT - W/ CLASSIC HANDLE - BRUSHED NICKEL (PVD)



**Product Code:** CO301.BN

## PRODUCT INFORMATION

| | |
|---|---|
| **Height:** | 160mm |
| **Width:** | 50mm |
| **Depth:** | 148mm |
| **Finish:** | Brushed Nickel (PVD) |
| **Product Type:** | Deck Mounted Basin Mixer Tap, Single Lever Basin Mixer |
| **Material** | Brass |
| **Waste** | Not included, purchase separately |
| **Guarantee** | 5 years |
| **Spout Projection (mm)** | 130 |

## DESCRIPTION

The new Cos basin mixer collection showcases a sleek, streamlined body with an intricately designed spout. It offers three distinct handle options—Classic, Knurled, and Fluted—each available in five stunning finishes: Chrome, Brushed Brass, Brushed Bronze, Brushed Nickel, and Satin Black.

The coloured finishes employ a PVD coating, guaranteeing superior quality and lasting durability.

This basin mixer features single-lever operation and includes flow regulators as standard, allowing you to save on water. It comes with a 15-year guarantee, giving you peace of mind that your bathroom taps are designed to stand the test of time.

# TECHNICAL DRAWING

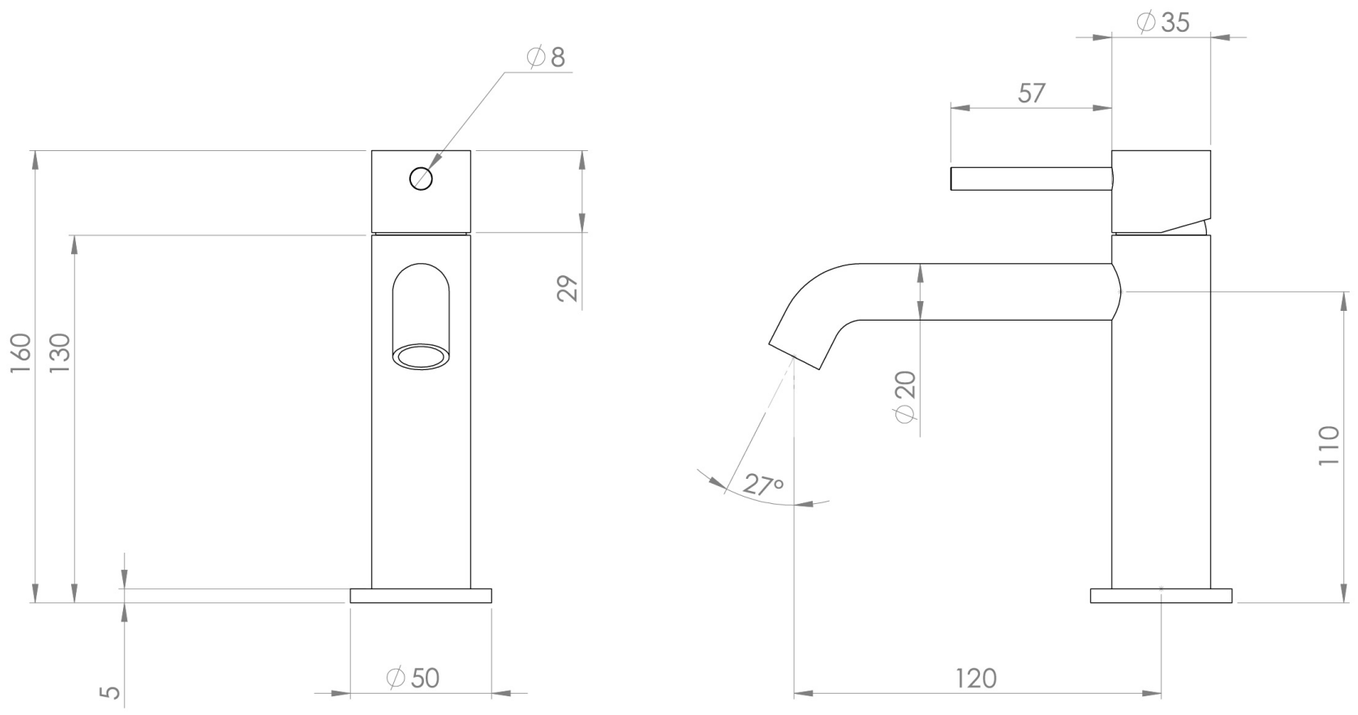


# FLOW RATE

- 1 Bar - Flowrate: 3.82 l/min
- 2 Bar - Flowrate: 5.04 l/min
- 3 Bar - Flowrate: 4.64 l/min
- 5 Bar - Flowrate: 4.57 l/min

---

Saneux reserves the right to alter the specifications and product range without prior notice. Dimensions are given as a guide only. Dimensions should not be used for surrounding furniture, fixtures and fittings until the product is on site.

https://saneux.com/products/cos-basin-mixer-kit-w-classic-handle-brushed-nickel-pvd