COS THERMOSTATIC BATH SHOWER MIXER -

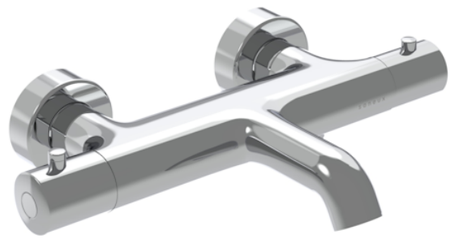

Product Code: CO307

PRODUCT INFORMATION

Height:	60mm
Width:	295mm
Depth:	195mm
Finish:	Chrome
Material	Brass
Waste	Not included, purchase separately
Guarantee	5 years
Spout Projection (mm)	195

DESCRIPTION

The Cos thermostatic bath shower mixer showcases a sleek, streamlined body with an intricately designed curved spout with outlet for a shower handset, rail and hose that can be purchased separately.

It offers five stunning finishes: Chrome, Brushed Brass, Brushed Bronze, Brushed Nickel, and Satin Black.

The colored finishes utilize a PVD coating, ensuring superior quality and long-lasting durability.

TECHNICAL DRAWING

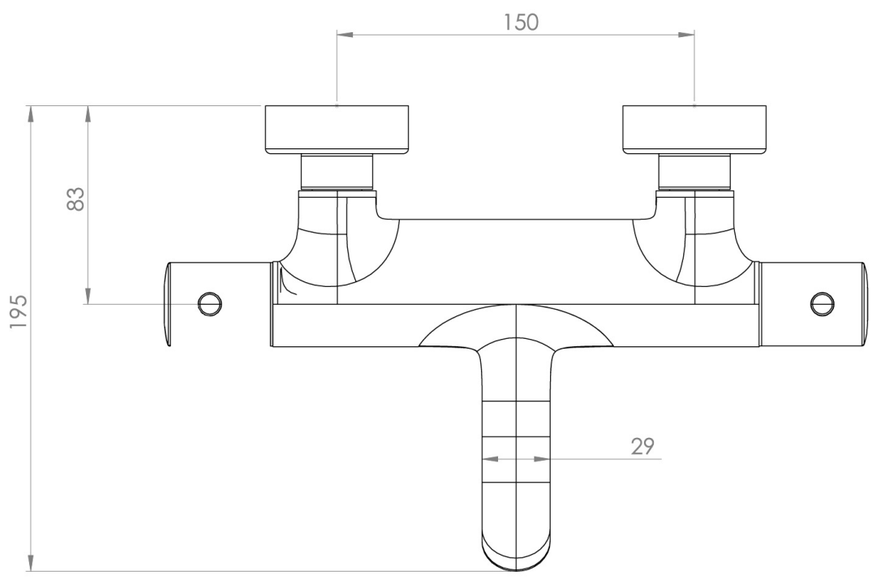

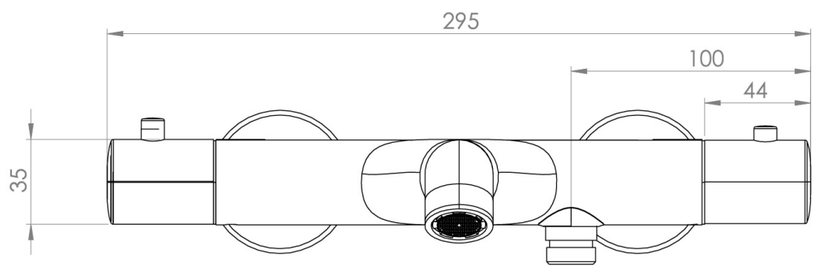

FLOW RATE

- 1 Bar - Flowrate: 7.99 l/min
- 2 Bar - Flowrate: 11.45 l/min
- 3 Bar - Flowrate: 14.06 l/min
- 5 Bar - Flowrate: 18.14 l/min

Saneux reserves the right to alter the specifications and product range without prior notice. Dimensions are given as a guide only. Dimensions should not be used for surrounding furniture, fixtures and fittings until the product is on site.