UNI 120X47CM 2 BOWL WASHBASIN OTH



Product Code: UN120B.0TH

PRODUCT INFORMATION

Finish:	Gloss White
Height:	170mm
Width:	1209mm
Depth:	461mm
Material	Ceramic
Weight	31.3kg
Overflow(s)	Yes
Overflow Position	Centre
Overflow Diameter	22mm
Compatible Overflows	OC01, OC02, OC03
Tap Holes	0 Tap Hole
Extra Tap Hole Options	6 tap holes (3 per bowl)
Recommended Waste Required	Slotted waste
Furniture Required For Installation?	Optional
Guarantee	Lifetime
Other Features	Includes 2 overflows for each basin bowl

DESCRIPTION

We've kept the UNI collection at a low profile - quite literally. It carries a vast range of slim profile basins with handle-less drawer units to help you to create a contemporary bathroom.

This UNI 120cm no tap hole washbasin with 2 bowls is a great size for spacious bathrooms and its slim profile allows it to blend seamlessly when paired with a vanity unit from the same collection. Plus, the 2 bowls allows couples to have their own space in their bathroom.

It can be wall-hung on it's own or paired with one of our UNI 120cm wall mounted units.

*With overflows

TECHNICAL DRAWING

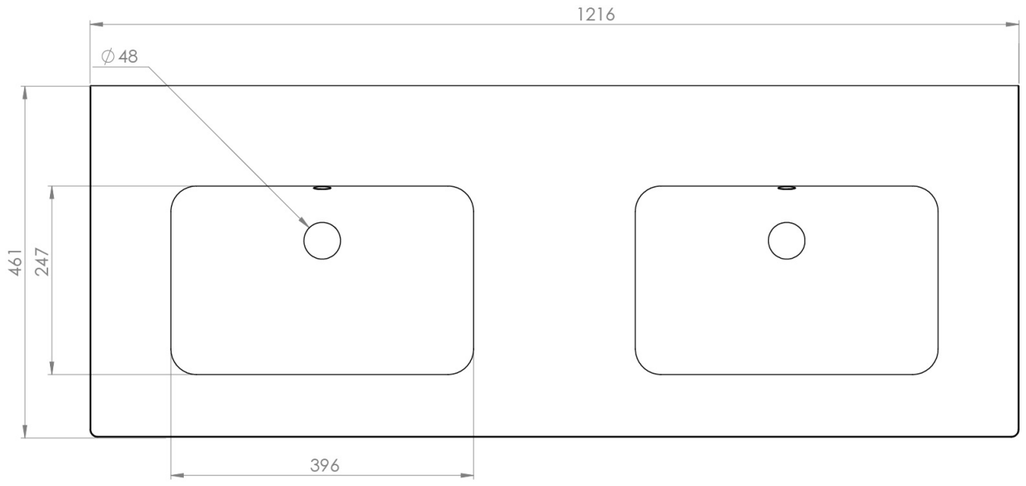

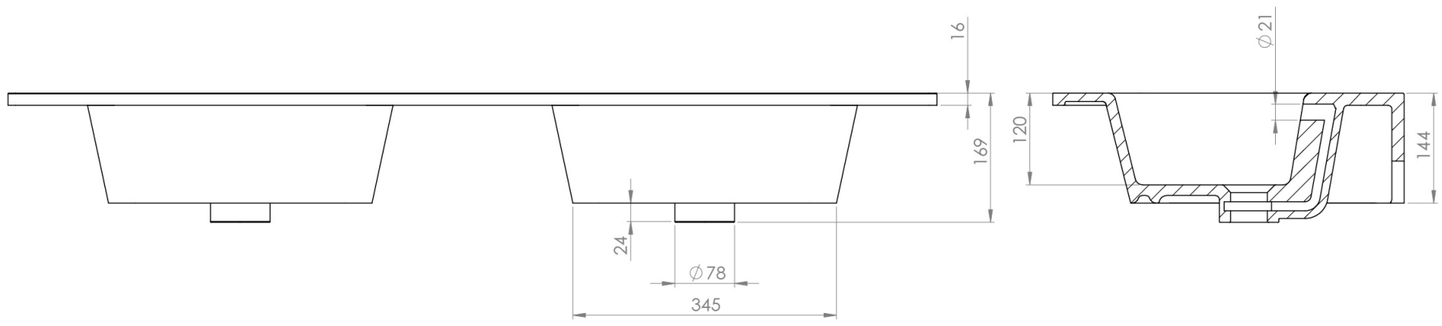

Saneux reserves the right to alter the specifications and product range without prior notice. Dimensions are given as a guide only. Dimensions should not be used for surrounding furniture, fixtures and fittings until the product is on site.

https://saneux.com/products/uni-120x47cm-2-bowl-washbasin-0th