HOSE RETAINING RING - WALL MOUNTED - BRUSHED



PRODUCT INFORMATION

Height:	6mm
Width:	70mm
Depth:	35mm
Finish:	Brushed Bronze (PVD)

Product Code: SHRR01.BR

DESCRIPTION

The COS collection was designed to create brassware that was both modern and classic to suit any style of bathroom.

Use this hose retainer ring with our COS shower slider rail, which works with our COS shower handsets to create a simplistic shower set up. It has a movable bracket & holder so you can adjust the height of your shower handset easily, whilst the rail itself stays fixed to the wall.

The finish is in fact a PVD coating, which will help to make the brassware look flawless for years to come.

TECHNICAL DRAWING

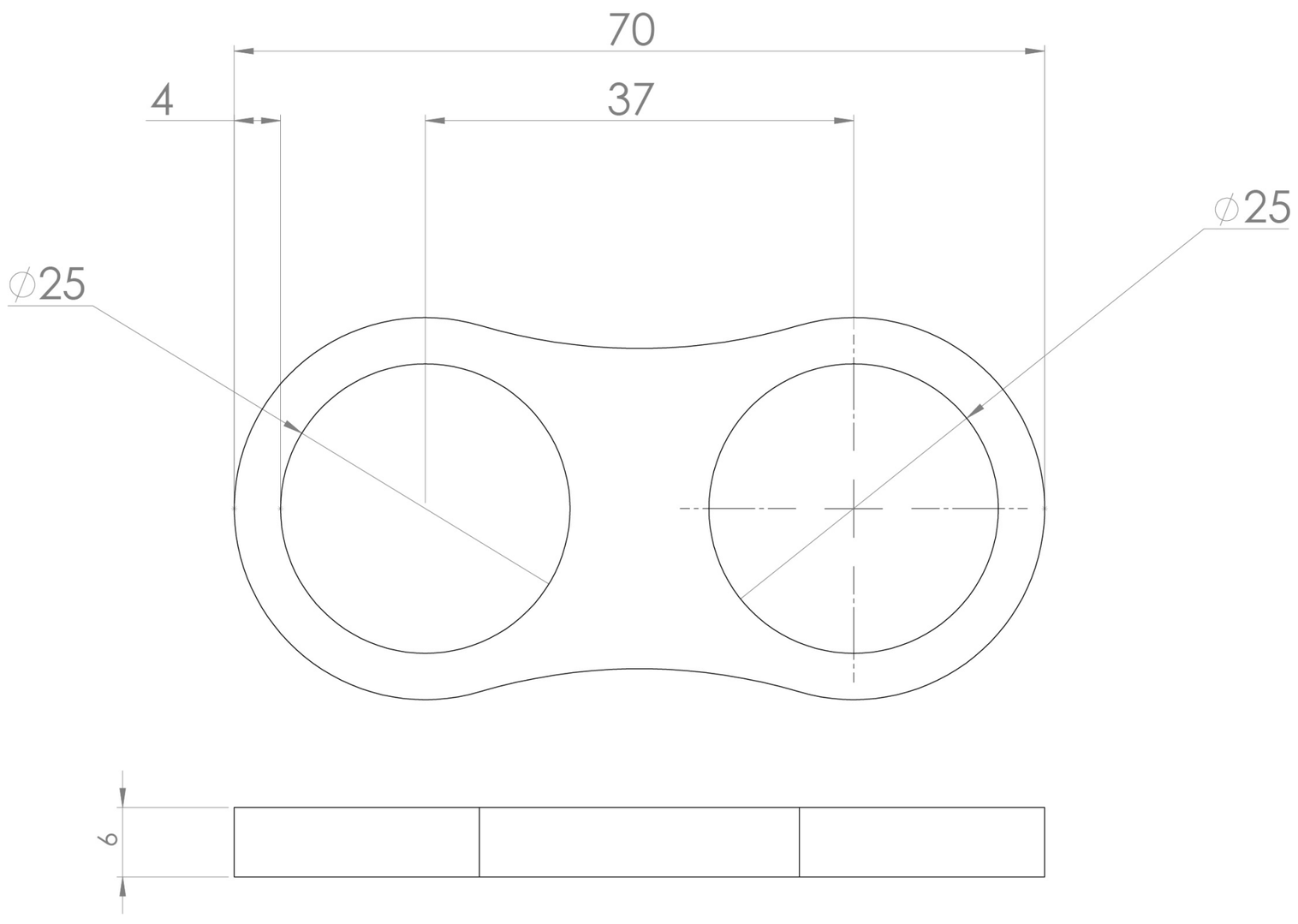

Saneux reserves the right to alter the specifications and product range without prior notice. Dimensions are given as a guide only. Dimensions should not be used for surrounding furniture, fixtures and fittings until the product is on site.