EDEN BASIN MIXER - SATIN BLACK



Product Code: ED001.SB

PRODUCT INFORMATION

Finish:	Satin Black (PVD)
Height:	218mm
Width:	45mm
Depth:	121mm
Product Type:	Deck Mounted Basin Mixer Tap, Single Lever Basin Mixer
Material	Brass
Weight	1.12kg
Compatible Aerator(s)	Cache JR
Waste	Not included, purchase separately
Guarantee	5 years
Spout Projection (mm)	121mm

DESCRIPTION

Beautifully curved and organic, the EDEN brassware is a truly unique brassware range.

The single lever basin mixer has a tall and elegant swan-like neck and this is closely replicated through the lever handle to create an all-encompassing sleek and sophisticated look. It also has a swivel spout so that you can change the direction of where the water hits the basin.

The finish is PVD, meaning it is extremely hardwearing and easy to clean.

Waste to be purchased separately.

TECHNICAL DRAWING

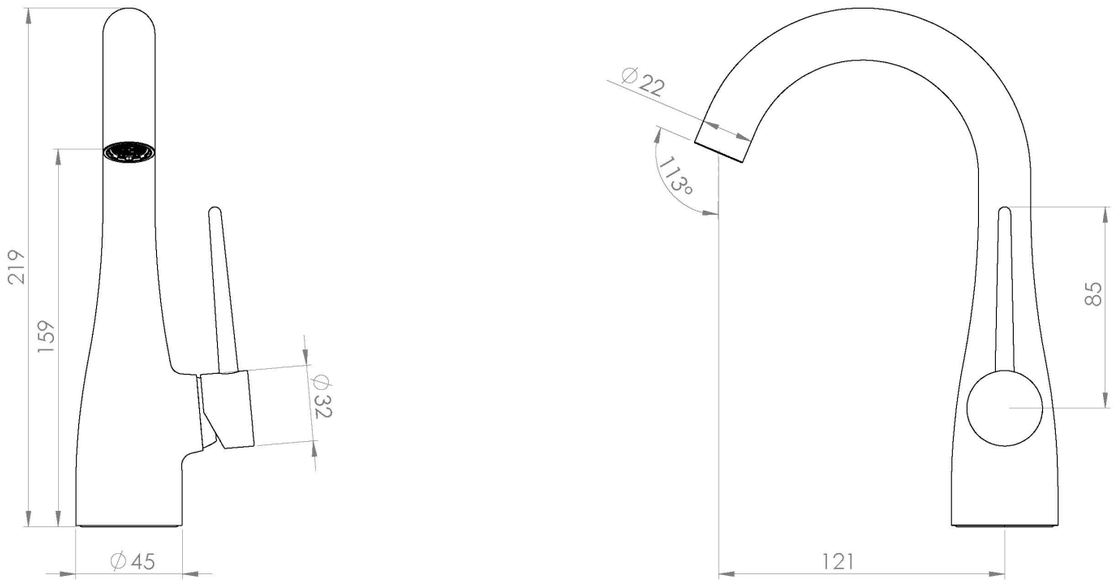

FLOW RATE

- 0.2 Bar - Flowrate: 2.18 l/min
- 0.5 Bar - Flowrate: 3.69 l/min
- 1 Bar - Flowrate: 5.29 l/min
- 2 Bar - Flowrate: 7.58 l/min
- 3 Bar - Flowrate: 9.47 l/min
- 5 Bar - Flowrate: 12.42 l/min

Saneux reserves the right to alter the specifications and product range without prior notice. Dimensions are given as a guide only. Dimensions should not be used for surrounding furniture, fixtures and fittings until the product is on site.

https://saneux.com/products/eden-basin-mixer-satin-black