COS ROUND SHOWER OUTLET ELBOW - BRUSHED



PRODUCT INFORMATION

Finish:	Brushed Brass (PVD)
Height:	50mm
Width:	50mm
Depth:	26mm
Material	Brass
Weight	0.2kg

Product Code: CO233.BB

DESCRIPTION

The COS collection was designed to create brassware that was both modern and classic to suit any style of bathroom.

This COS shower outlet elbow in brushed brass goes in line with the COS shower brassware products, and is to be paired with a handset and shower hose. The brushed brass finish is in fact a PVD coating, which will help to make the brassware look flawless for years to come.

TECHNICAL DRAWING

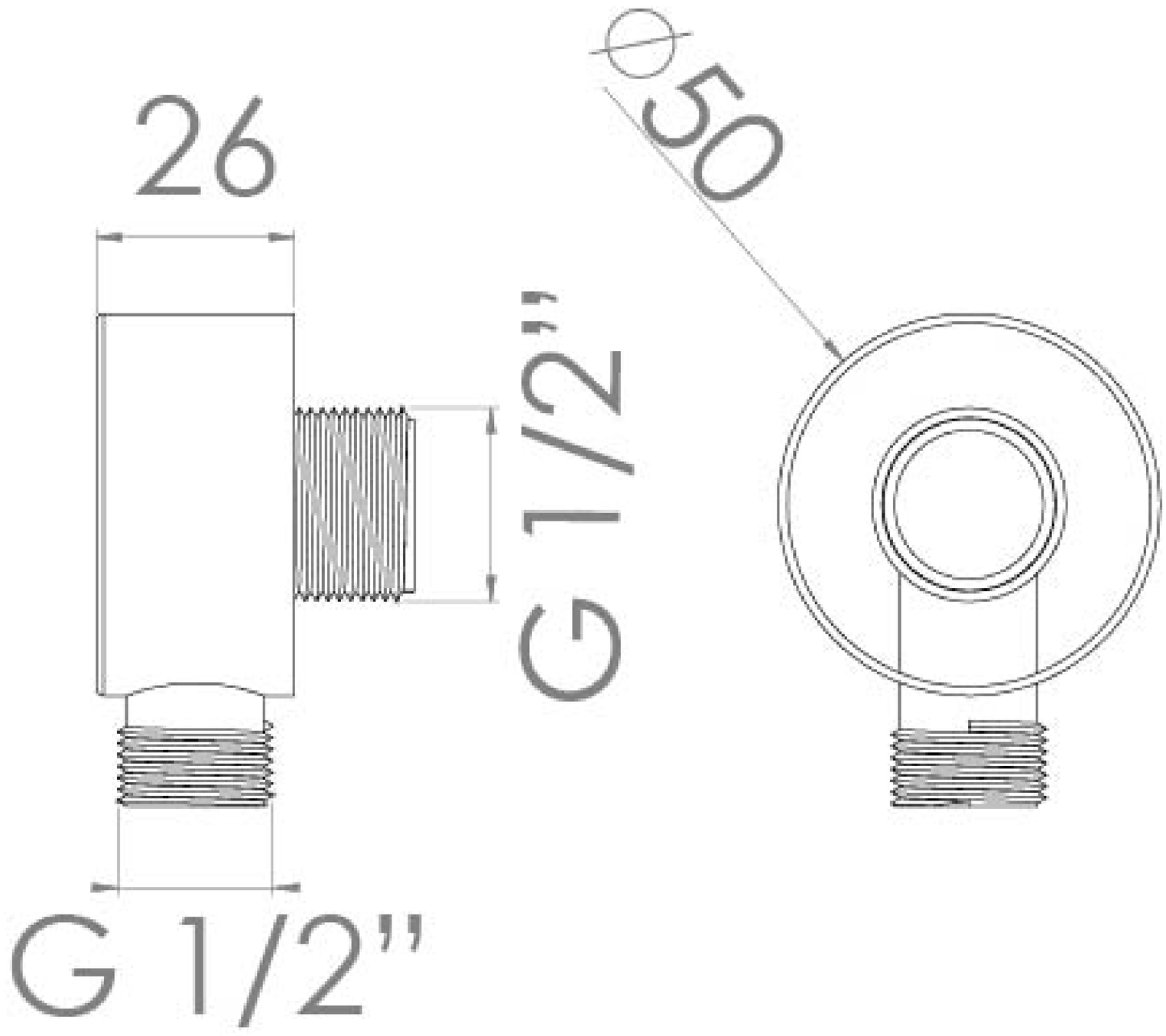

Saneux reserves the right to alter the specifications and product range without prior notice. Dimensions are given as a guide only. Dimensions should not be used for surrounding furniture, fixtures and fittings until the product is on site.

https://saneux.com/products/cos-round-shower-outlet-elbow-brushed-brass