IN BLACK



PRODUCT INFORMATION

Finish:	Satin Black
Width:	34mm
Depth:	34mm
Material	Brass
Guarantee	2 years

Product Code: HDL32.SB

DESCRIPTION

Many of our units allow you to choose a handle and we have various style options you can go for.

Palermo was created to complement our new Frontier collection; nevertheless, you're not confined to that selection. Feel free to explore alternative furniture options that necessitate a handle, and let your imagination run wild!

TECHNICAL DRAWING

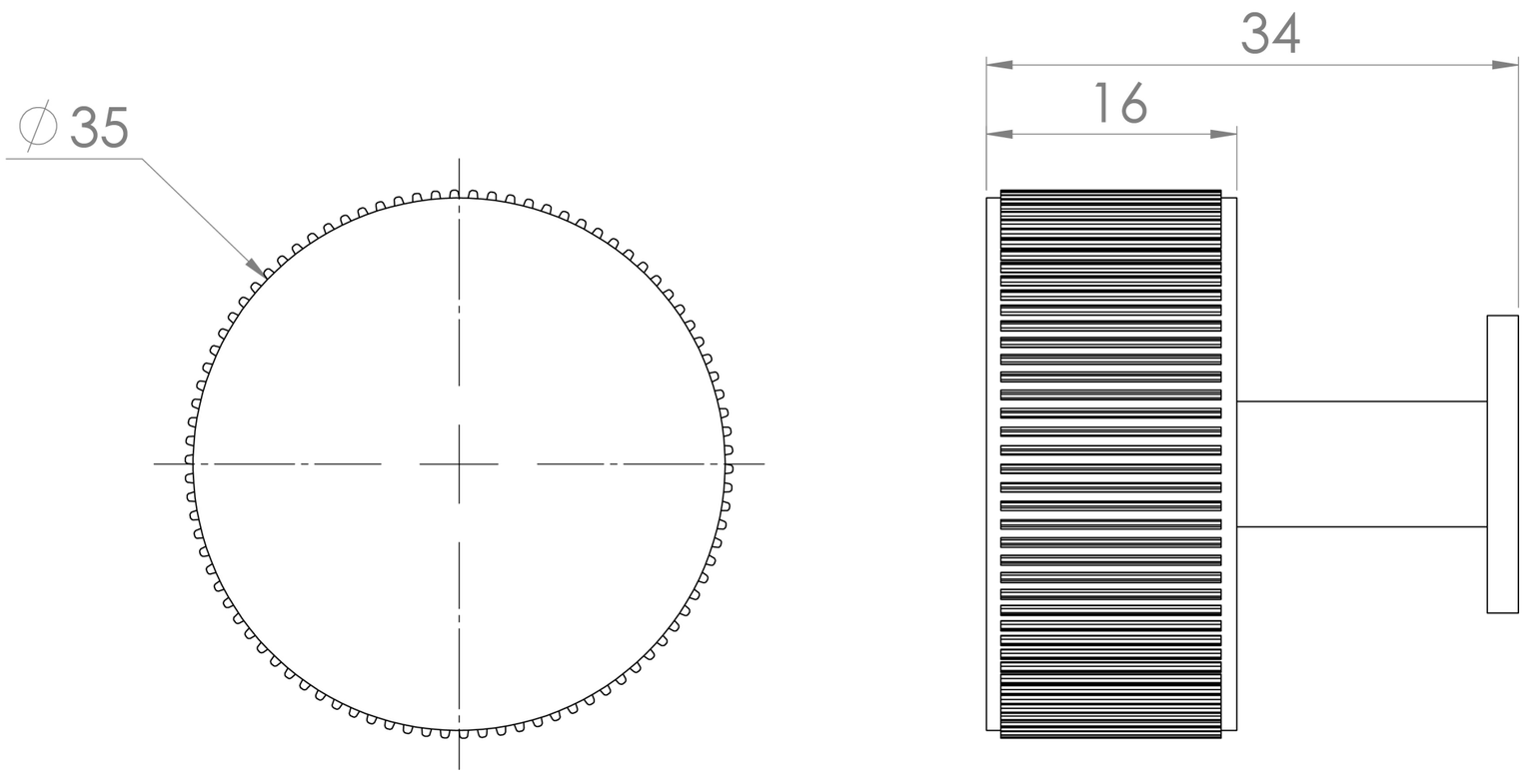

Saneux reserves the right to alter the specifications and product range without prior notice. Dimensions are given as a guide only. Dimensions should not be used for surrounding furniture, fixtures and fittings until the product is on site.