# HED NICKEL

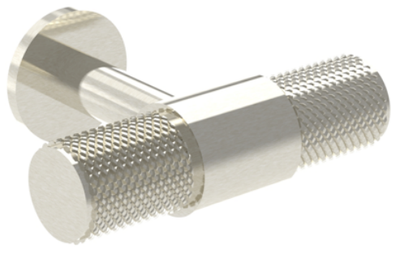

## PRODUCT INFORMATION

| | |
|---|---|
| **Finish:** | Brushed Nickel (PVD) |
| **Height:** | 19mm |
| **Width:** | 50mm |
| **Depth:** | 32mm |
| **Material** | Brass |
| **Guarantee** | 2 years |

**Product Code:** HDL31.BN

## DESCRIPTION

Many of our units allow you to choose a handle and we have various style options you can go for.

Malmö was created to complement our new Frontier collection; nevertheless, you're not confined to that selection. Feel free to explore alternative furniture options that necessitate a handle, and let your imagination run wild!

## TECHNICAL DRAWING

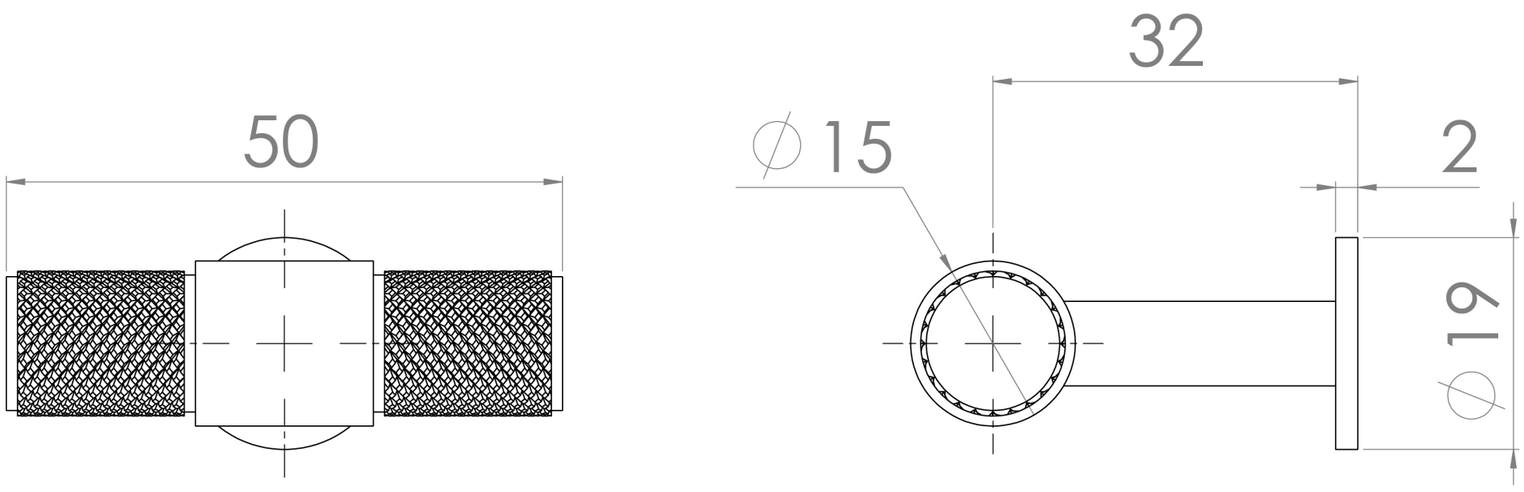


Saneux reserves the right to alter the specifications and product range without prior notice. Dimensions are given as a guide only. Dimensions should not be used for surrounding furniture, fixtures and fittings until the product is on site.