FRONTIER 120CM 2 DRAWER FLOOR STANDING UNIT WITH UNDERMOUNT TRAY- MATTE FIORD



Product Code: FR120DF.MF.2

PRODUCT INFORMATION

Finish:	Matte Fiord
Height:	700mm
Width:	1200mm
Depth:	500mm
Material	MDF
Weight	45kg
Guarantee	5 years
Configuration	2 Drawer
Drawer Type	Soft close
Compatible Countertop(s)	FR120T.C
Handle(s) Required	2, purchase separately
Other Features	Easy installation Quick release drawers, Undermount Tray

DESCRIPTION

Inspired by Scandinavian influences and classic Italian style, FRONTIER is our minimalist and luxurious furniture collection. The vanity units are modern yet simplistic, paying homage to Scandinavian designs, whilst the Carrara white countertops incorporate Italian flair to instantly bring the units to life.

The 120cm unit, available in Matte Fiord and Matte White finishes, features clean textured lines that can blend with both modern and traditional styles. Frontier not only appeals to your sense of design but also caters to your organizational needs with its undermount tray and stylish beechwood drawer divider. Personalise your Frontier unit by choosing handles and sit-on basins from our SIENNA range that resonate with your unique style.

This is the re-imagined New FRONTIER.

*Furniture only. Countertop [FR120T.C], sit-on basins x 2, and handles x 2 to be purchased separately.

TECHNICAL DRAWING

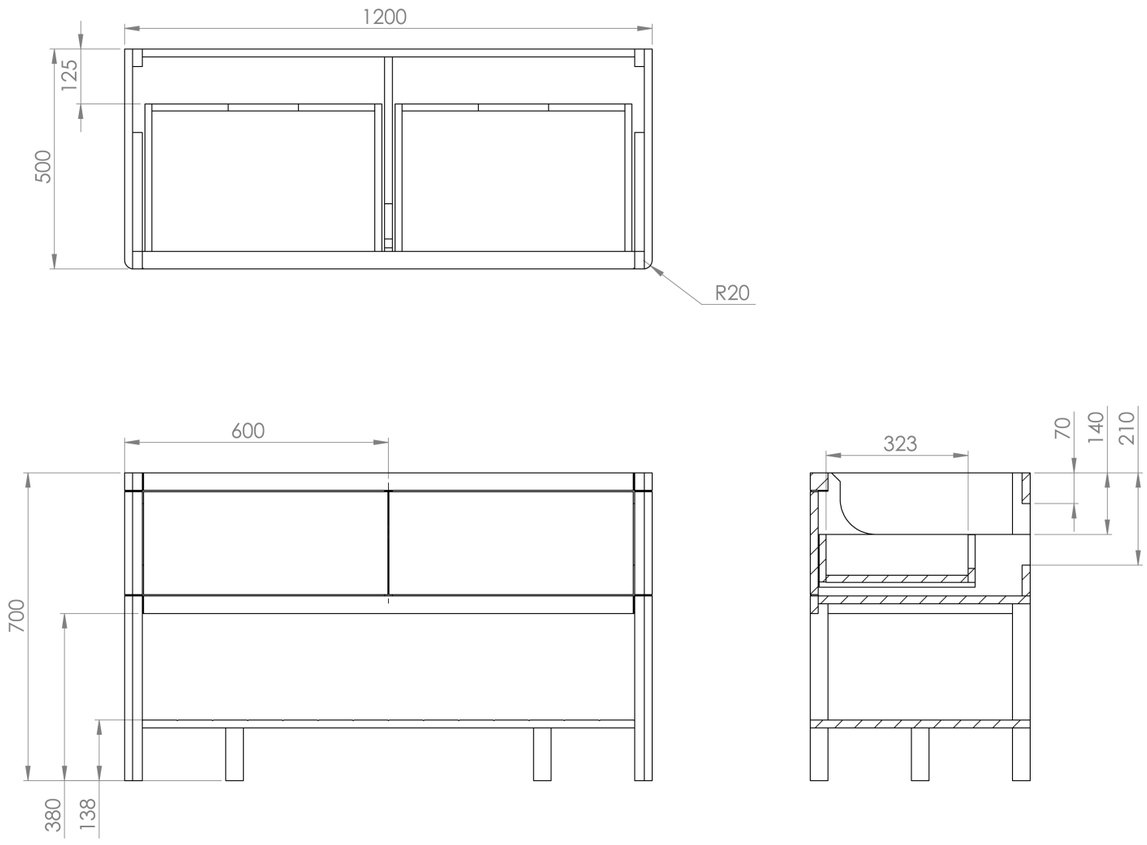

Saneux reserves the right to alter the specifications and product range without prior notice. Dimensions are given as a guide only. Dimensions should not be used for surrounding furniture, fixtures and fittings until the product is on site.

https://saneux.com/products/frontier-120cm-2-drawer-floor-standing-unit-with-undermount-tray-matte-fiord