SIENNA 55X35CM RECTANGULAR COUNTERTOP WASHBASIN - WITH OVERFLOW

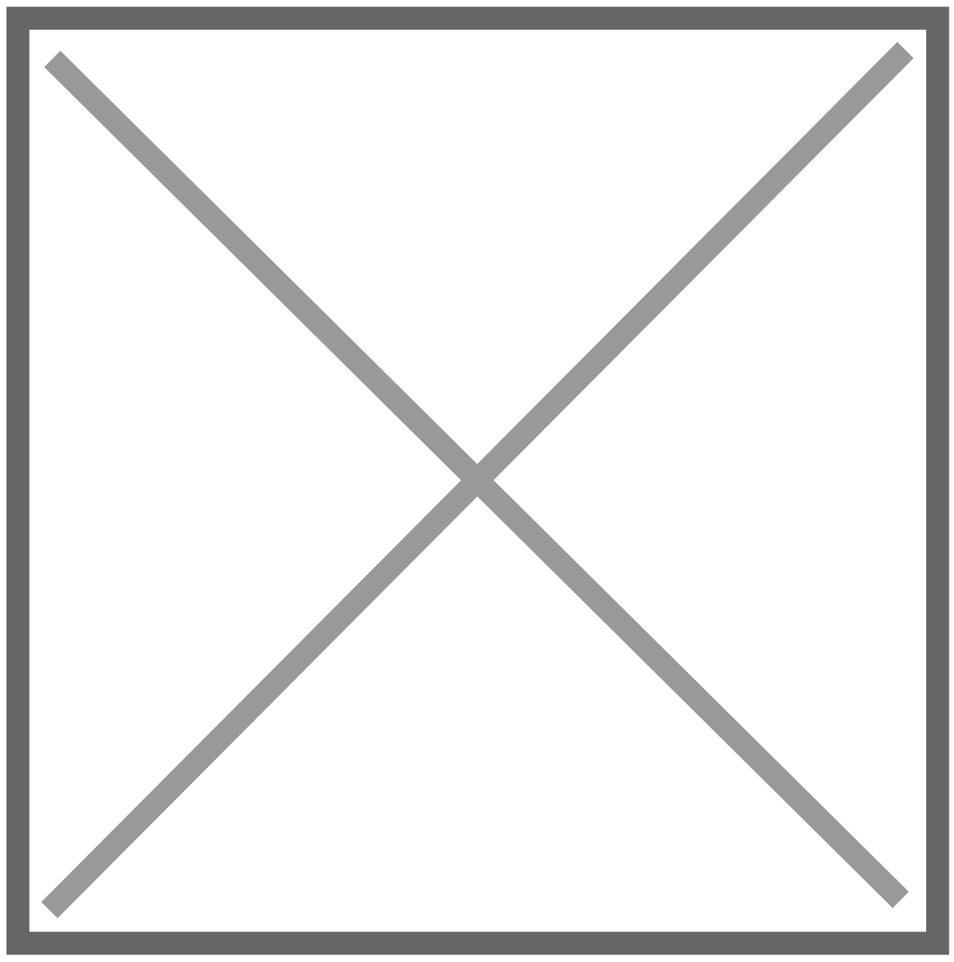

Product Code: SI055SCB

PRODUCT INFORMATION

Finish:	Gloss White
Height:	145mm
Width:	557mm
Depth:	340mm
Material	Ceramic
Overflow(s)	Yes
Overflow Position	Centre
Overflow Diameter	Oval
Compatible Overflows	sp.si.001
Tap Holes	0 Tap Hole
Recommended Waste Required	Slotted waste
Furniture Required For Installation?	Yes
Guarantee	Lifetime
Extra Tap Hole Options	N/A

DESCRIPTION

The delicate form of the SIENNA sanitaryware collection is evident through the thin ceramic used, creating a stunning selection of refined countertop washbasins.

A cutting edge design featuring an integrated overflow sets this countertop basin apart as an industry pioneer.

TECHNICAL DRAWING

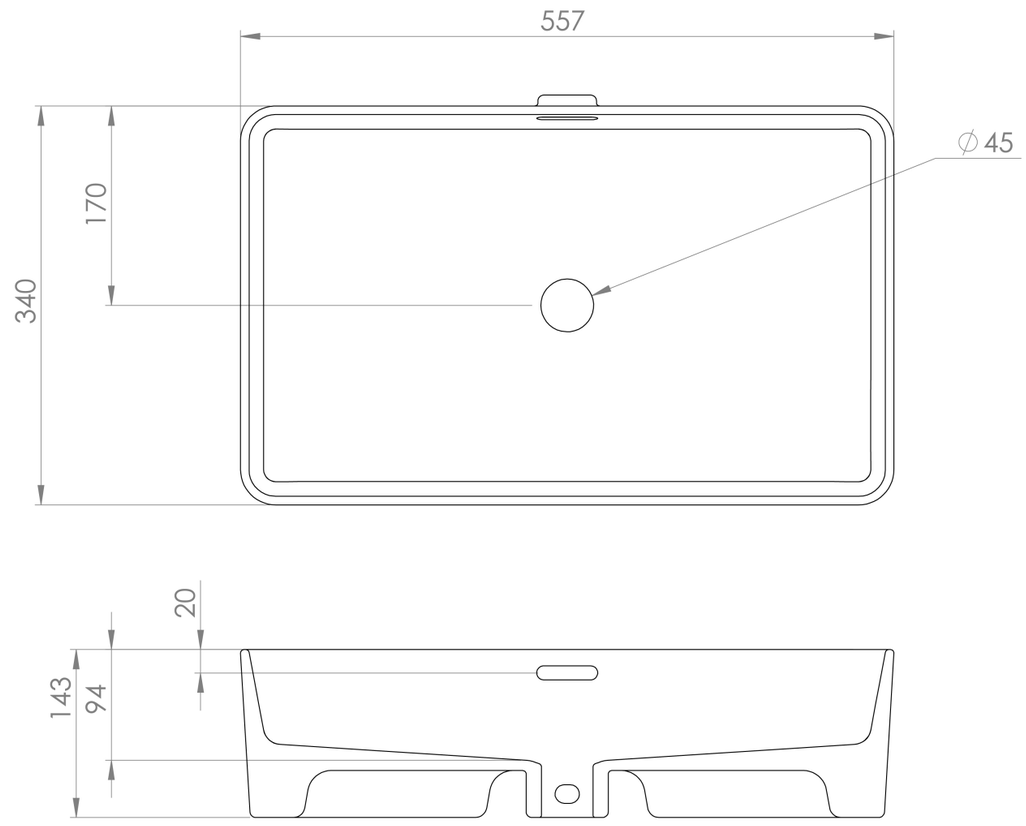

Saneux reserves the right to alter the specifications and product range without prior notice. Dimensions are given as a guide only. Dimensions should not be used for surrounding furniture, fixtures and fittings until the product is on site.

https://saneux.com/products/sienna-55x35cm-rectangular-countertop-washbasin-with-overflow