MONUMENT 80CM 1 DRAWER WALL MOUNTED UNIT - MATTE WHITE



Product Code: MO080W1.MW

PRODUCT INFORMATION

Finish:	Matte White
Height:	400mm
Width:	795mm
Depth:	455mm
Material	MDF
Guarantee	5 years
Configuration	1 Drawer
Drawer Type	Soft close
Compatible Basin(s)	UN080B, UN080B.0TH
Compatible Countertop(s)	UN080T.MW.2, UN080T.MA, UN080T.MW, UN080T.EO, UN080T.MC, UN080T.C, UNI080T.C
Other Features	Easy installation Quick release drawers

DESCRIPTION

Inspired by the iconic London landmark itself, MONUMENT was designed to bring an element of London history into the future.

This fluted furniture collection encapsulates the delicate curves seen on the Monument column, creating a softer feel to the vanity units whilst also giving more depth to the unit.

The handle-less 80cm 1 drawer wall mounted unit features plenty of storage space, a soft closing drawer, and a luxurious look that will stand the test of time.

*Basin or countertop to be purchased separately
Compatible basins: UN080B, UN080B.0TH
Compatible countertop: UNI080T.C

TECHNICAL DRAWING

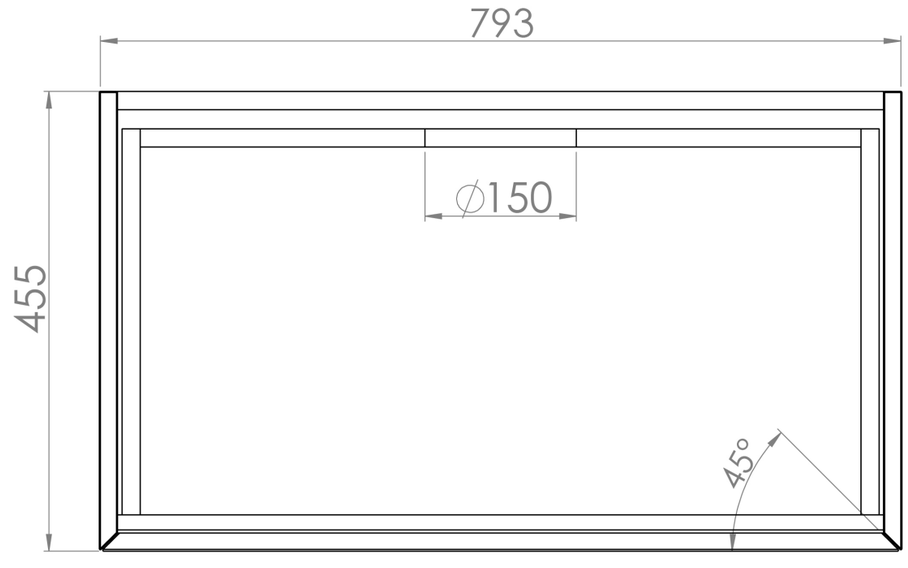

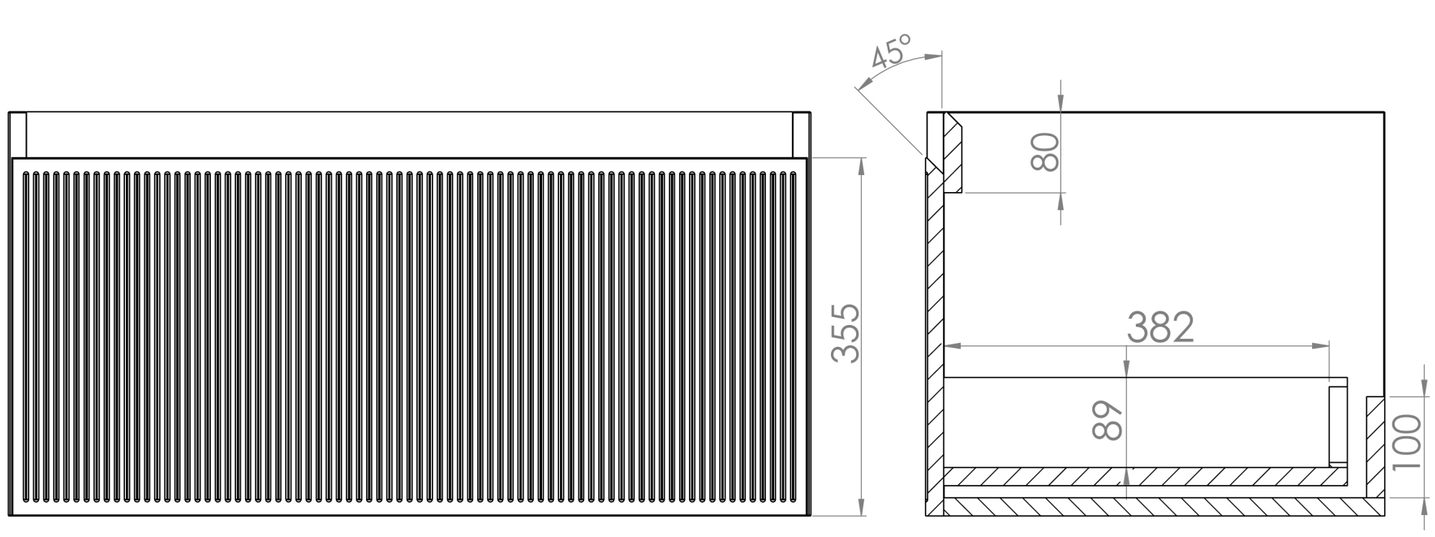

Saneux reserves the right to alter the specifications and product range without prior notice. Dimensions are given as a guide only. Dimensions should not be used for surrounding furniture, fixtures and fittings until the product is on site.

https://saneux.com/products/monument-80cm-1-drawer-wall-mounted-unit-matte-white