HYDE 60CM 2 DRAWER WALL MOUNTED UNIT - MATTE FIORD



Product Code: HY060W2.MF.2

PRODUCT INFORMATION

Finish:	Matte Fiord
Height:	500mm
Width:	588mm
Depth:	452mm
Material	MDF, MFC
Weight	21.6kg
Guarantee	5 years
Configuration	2 Drawer
Drawer Type	Soft close
Compatible Basin(s)	HY060B, HY060B.0TH
Handle(s) Required	2, purchase separately
Other Features	Easy installation Quick release drawers

DESCRIPTION

The HYDE collection features curved short projection washbasins and furniture units, but for those who have the space to spare, there is also the option for much deeper basin & unit combinations.

This 60cm 2 drawer wall mounted unit provides you with practicality by offering plenty of storage space to keep your bathroom tidy, yet still having a modern and stylish look through it's clean lines and curved corners. It has two deep drawers for storing toiletries, and the matte fiord finish will make it a focal point of the bathroom.

*Basin to be purchased separately
Compatible basins: HY060B, HY060B.0TH

**Handles to be purchased separately

TECHNICAL DRAWING

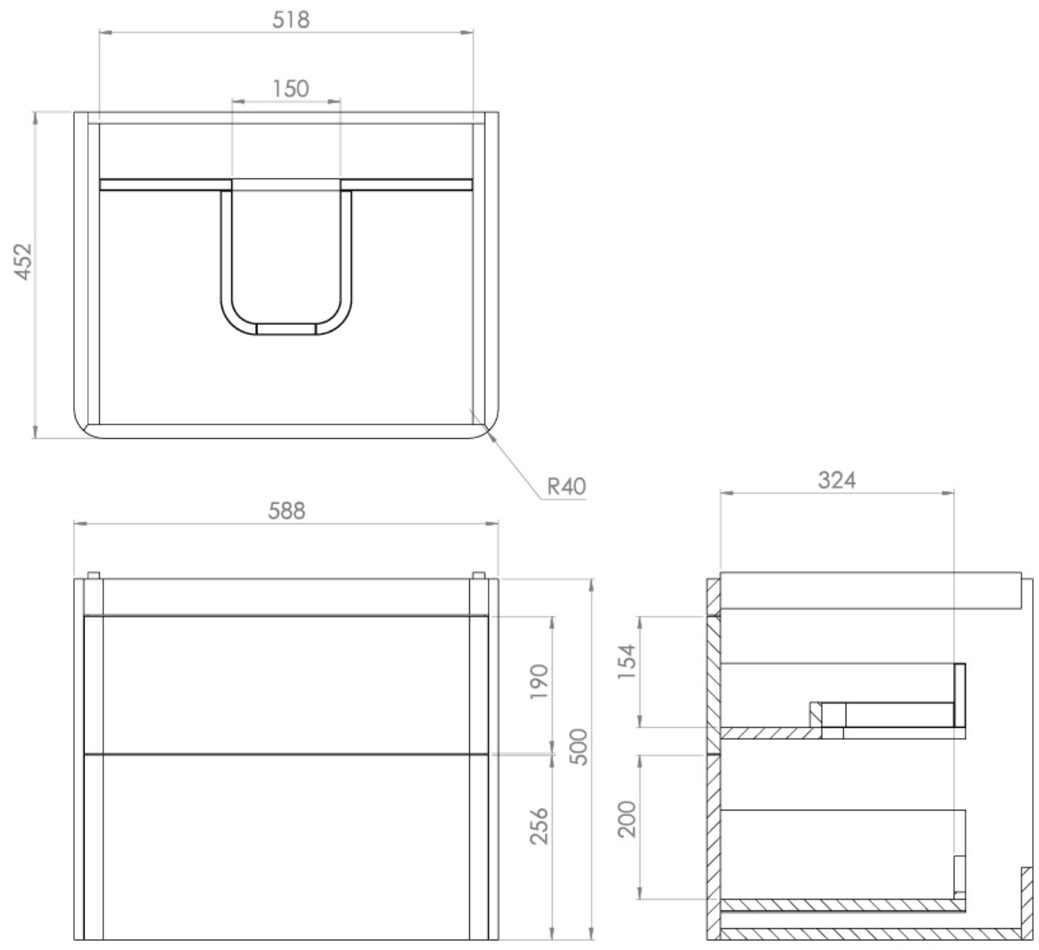

Saneux reserves the right to alter the specifications and product range without prior notice. Dimensions are given as a guide only. Dimensions should not be used for surrounding furniture, fixtures and fittings until the product is on site.

https://saneux.com/products/hyde-60cm-2-drawer-wall-mounted-unit-matte-fiord