# HYDE 50CM 1 DRAWER WALL MOUNTED UNIT - MATTE FIORD



**Product Code:** HY050W1.MF.2

## PRODUCT INFORMATION

| | |
|---|---|
| **Finish:** | Matte Fiord |
| **Height:** | 400mm |
| **Width:** | 489mm |
| **Depth:** | 455mm |
| **Material** | MDF, MFC |
| **Weight** | 16kg |
| **Guarantee** | 5 years |
| **Configuration** | 1 Drawer |
| **Drawer Type** | Soft close |
| **Compatible Basin(s)** | HY050B, HY050B.0TH |
| **Handle(s) Required** | 1, purchase separately |
| **Other Features** | Easy installation Quick release drawers |

## DESCRIPTION

The HYDE collection features curved short projection washbasins and furniture units, but for those who have the space to spare, there is also the option for much deeper basin & unit combinations.

This 50cm 1 drawer wall mounted unit in matte fiord provides you with practicality by offering plenty of storage space to keep your bathroom tidy, yet still having a modern and stylish look.

*Basin (HY050B, HY050B.0) and handles to be purchased separately

# TECHNICAL DRAWING

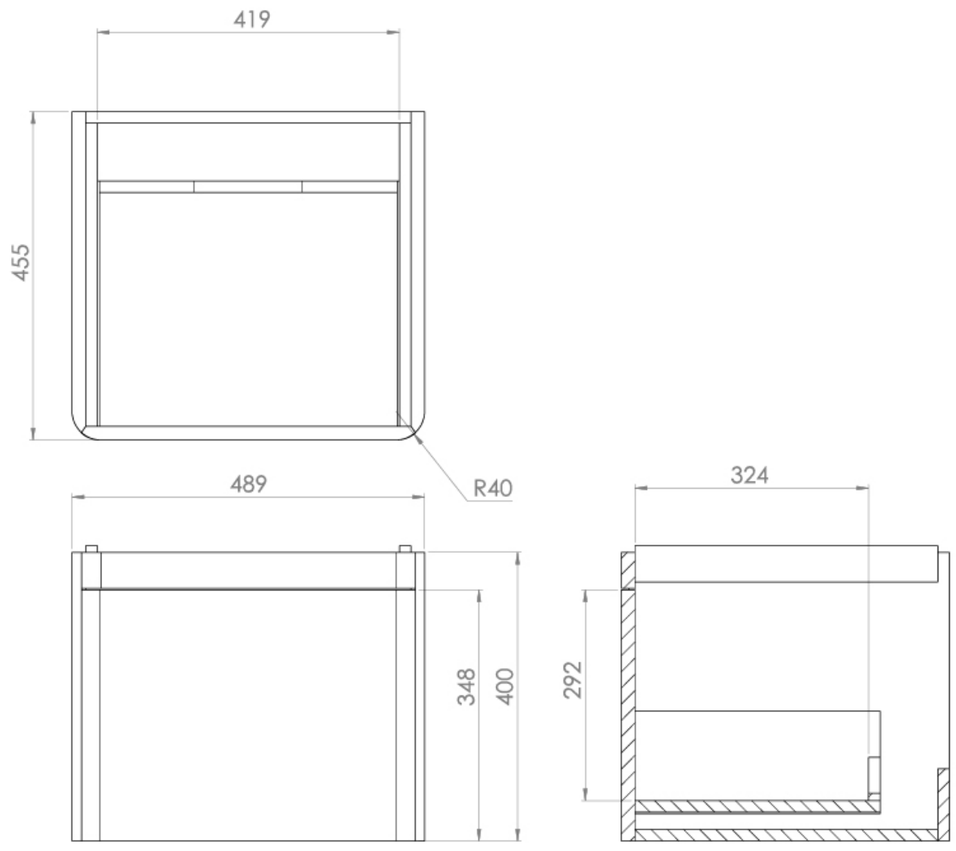


Saneux reserves the right to alter the specifications and product range without prior notice. Dimensions are given as a guide only. Dimensions should not be used for surrounding furniture, fixtures and fittings until the product is on site.

https://saneux.com/products/hyde-50cm-1-drawer-wall-mounted-unit-matte-fiord