UNI 80X47CM WASHBASIN 1TH



Product Code: UN080B

PRODUCT INFORMATION

Finish:	Gloss White
Height:	170mm
Width:	815mm
Depth:	465mm
Material	Ceramic
Weight	19.8kg
Overflow(s)	Yes
Overflow Position	Centre
Overflow Diameter	22mm
Compatible Overflows	OC01, OC02, OC03
Tap Holes	1 Tap Hole
Tap Hole Position	Centre
Extra Tap Hole Options	2 tap holes
Recommended Waste Required	Slotted waste
Furniture Required For Installation?	Optional
Guarantee	Lifetime

DESCRIPTION

We've kept the UNI collection at a low profile - quite literally. It carries a vast range of slim profile basins with handle-less drawer units to help you to create a contemporary bathroom.

This UNI 80cm 1 tap hole washbasin is a great generic size for most bathrooms and its slim profile allows it to blend seamlessly when paired with a vanity unit from the same collection.

It can be wall-hung on it's own or paired with one of our UNI 80cm wall mounted units.

*With an overflow

TECHNICAL DRAWING

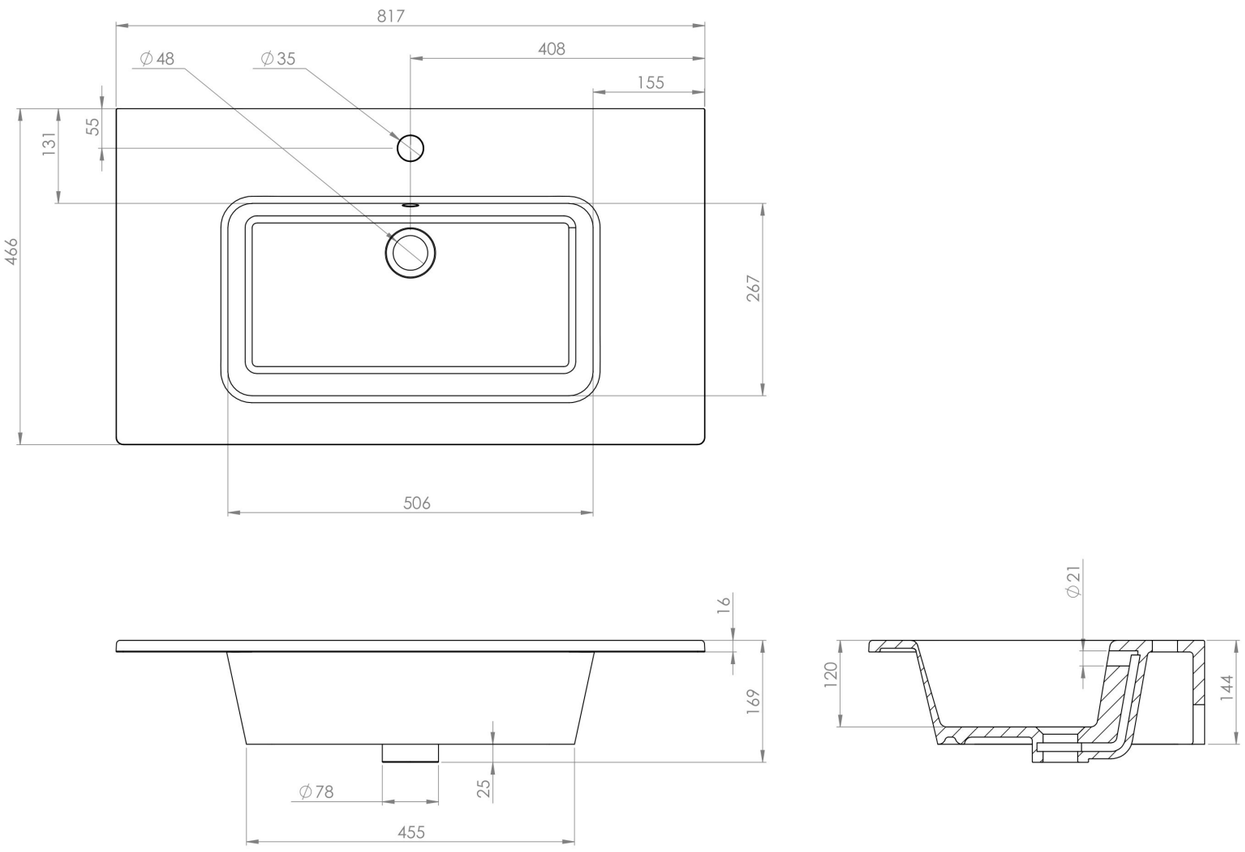

Saneux reserves the right to alter the specifications and product range without prior notice. Dimensions are given as a guide only. Dimensions should not be used for surrounding furniture, fixtures and fittings until the product is on site.

https://saneux.com/products/uni-80x47cm-washbasin-1th