MONUMENT 40CM 1 DOOR WALL HUNG UNIT - MATTE BLACK



Product Code: MO040D1.MB

PRODUCT INFORMATION

Finish:	Matte Black
Height:	530mm
Width:	390mm
Depth:	357mm
Material	MDF
Weight	10kg
Guarantee	5 years
Configuration	1 Door
Door Type	Soft close
Compatible Basin(s)	UN040B, UN040B.0TH
Door Opening	Reversible

DESCRIPTION

Inspired by the iconic London landmark itself, MONUMENT was designed to bring an element of London history into the future.

This fluted furniture collection encapsulates the delicate curves seen on the Monument column, creating a softer feel to the vanity units whilst also giving more depth to the unit.

The handle-less 40cm 1 door wall mounted unit in the striking matte black finish is perfect for smaller bathrooms. It features plenty of storage space, a soft closing reversible door, and a luxurious look that will stand the test of time.

*Basin to be purchased separately
Compatible basins: UN040B, UN040B.0TH

MONUMENT is only available through selected bathroom retailers & showrooms as part of our Niche collections. Please contact us for details of the displaying retailers near you.

TECHNICAL DRAWING

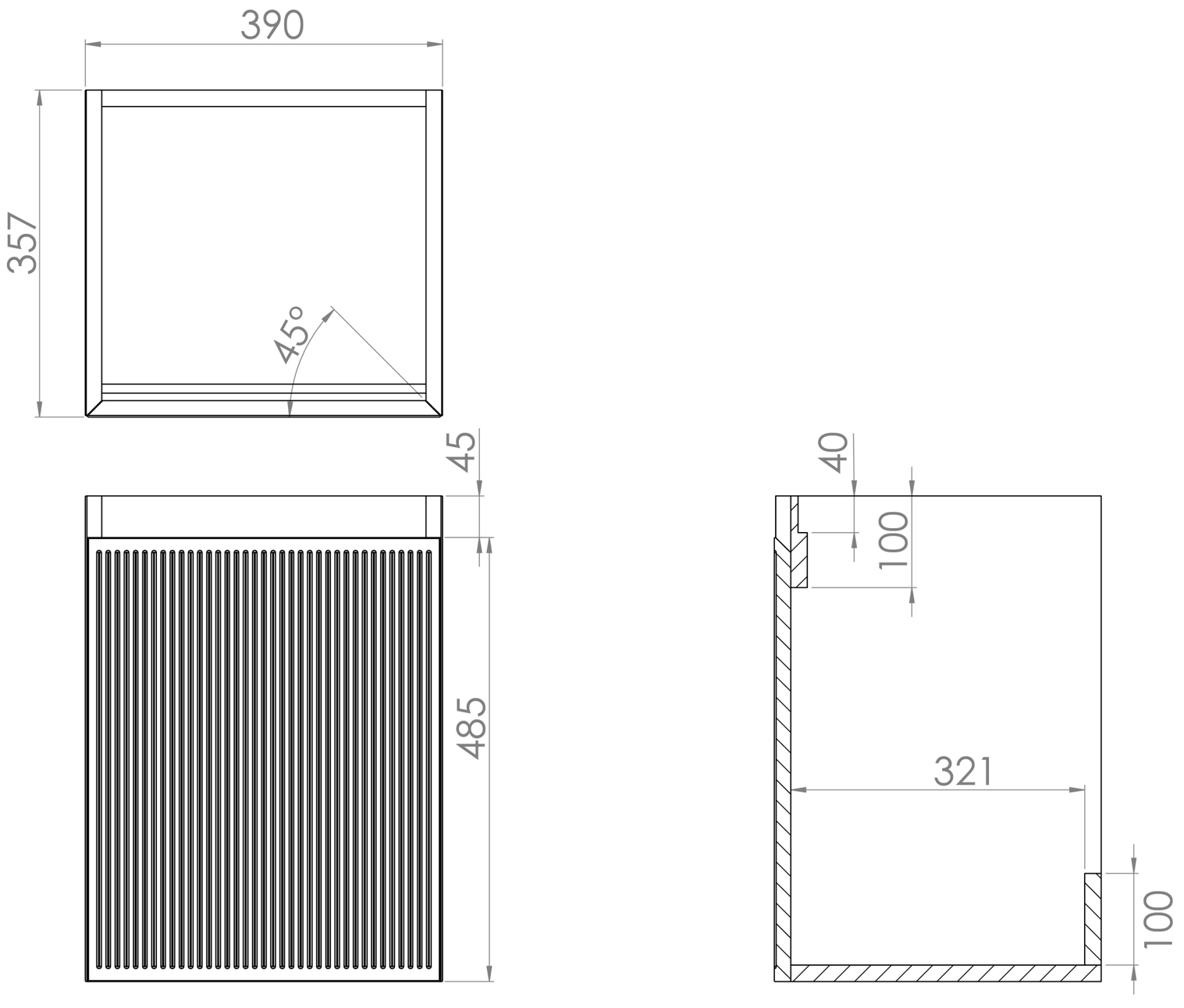

Saneux reserves the right to alter the specifications and product range without prior notice. Dimensions are given as a guide only. Dimensions should not be used for surrounding furniture, fixtures and fittings until the product is on site.

https://saneux.com/products/monument-40cm-1-door-wall-hung-unit-matte-black