UNI 50CM 1 DRAWER WALL HUNG UNIT - MATTE WHITE



Product Code: UNI050W1.MW

PRODUCT INFORMATION

Finish:	Matte White
Height:	400mm
Width:	490mm
Depth:	358mm
Material	MDF, MFC
Weight	20kg
Guarantee	5 years
Configuration	1 Drawer
Drawer Type	Soft close
Compatible Basin(s)	UN050B, UN050B.0TH
Other Features	Easy installation Quick release drawers Saneux branded drawer covers

DESCRIPTION

We've kept the UNI collection at a low profile - quite literally. It carries a vast range of slim profile basins with handle-less drawer units to help you to create a contemporary bathroom.

The 50cm 1 drawer wall mounted unit is ideal for small bathrooms with its short projection and essential storage space, and the finer detail of a soft closing drawer prevents slamming. Opt for the matte white finish, perfect to suit any bathroom colour scheme.

*Basin to be purchased separately
Compatible basins: UN050B, UN050B.0TH

TECHNICAL DRAWING

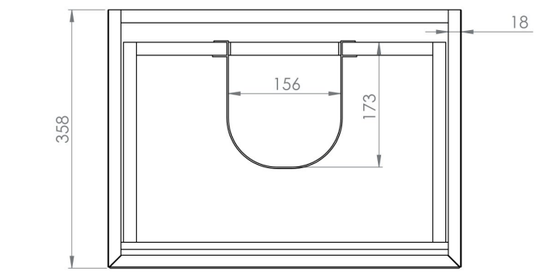

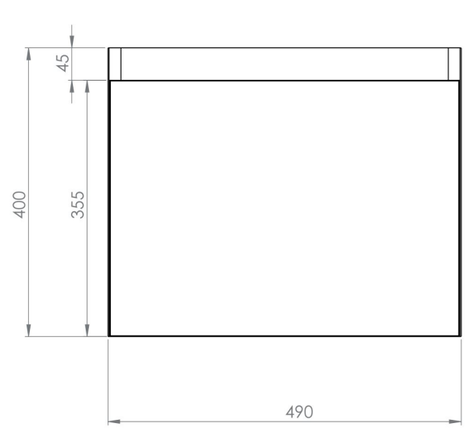

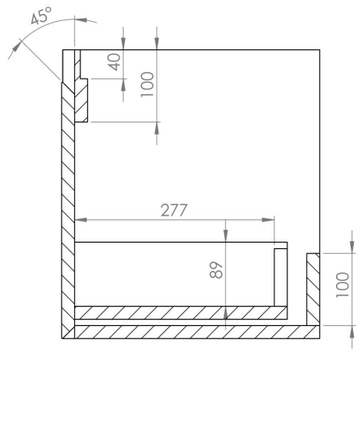

Saneux reserves the right to alter the specifications and product range without prior notice. Dimensions are given as a guide only. Dimensions should not be used for surrounding furniture, fixtures and fittings until the product is on site.

https://saneux.com/products/uni-50cm-1-drawer-wall-hung-unit-matte-white