COS 200X8MM ROUND SHOWER HEAD - BRUSHED

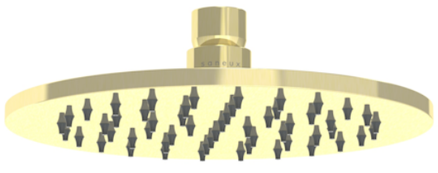

Product Code: CO226.BB

PRODUCT INFORMATION

Finish:	Brushed Brass (PVD)
Height:	60mm
Width:	200mm
Depth:	200mm
Material	Brass, Stainless Steel
Weight	0.95kg
Approvals/Standards	WRAS
Guarantee	5 years

DESCRIPTION

The COS collection was designed to create brassware that was both modern and classic to suit any style of bathroom.

Step into a luxurious and relaxing shower by opting for this COS standard shower head in brushed brass. It perfectly suits our round ceiling mounted and wall mounted shower arms in the same range, and it has a swivel feature so you can change the direction of spray.

The brushed brass finish is in fact a PVD coating, which will help to make the brassware look flawless for years to come.

TECHNICAL DRAWING

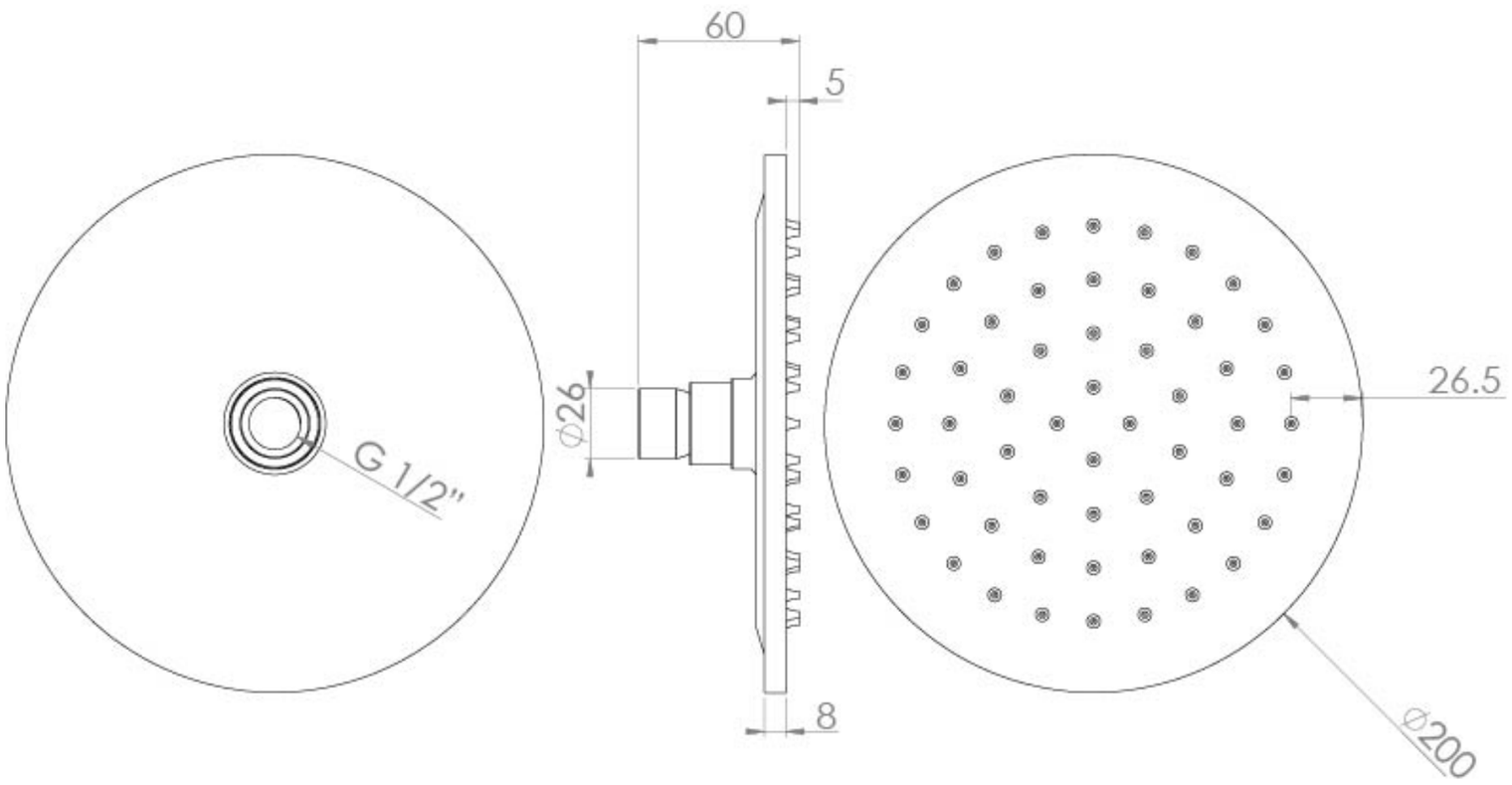

FLOW RATE

- 0.5 Bar - Flowrate: 4.5 l/min
- 1 Bar - Flowrate: 13.5 l/min
- 2 Bar - Flowrate: 19.8 l/min
- 3 Bar - Flowrate: 23.6 l/min
- 4 Bar - Flowrate: 23.1 l/min
- 5 Bar - Flowrate: 31.5 l/min

Saneux reserves the right to alter the specifications and product range without prior notice. Dimensions are given as a guide only. Dimensions should not be used for surrounding furniture, fixtures and fittings until the product is on site.