UNI 40X36CM WASHBASIN 1TH



Product Code: UN040B

PRODUCT INFORMATION

Finish:	Gloss White
Height:	168mm
Width:	400mm
Depth:	360mm
Material	Ceramic
Weight	10kg
Overflow(s)	Yes
Overflow Position	Centre
Overflow Diameter	29mm
Tap Holes	1 Tap Hole
Tap Hole Position	Centre
Recommended Waste Required	Slotted waste
Furniture Required For Installation?	Yes
Guarantee	Lifetime

DESCRIPTION

We've kept the UNI collection at a low profile - quite literally. It carries a vast range of slim profile basins with handle-less drawer units to help you to create a contemporary bathroom.

This UNI 40cm 1 tap hole basin is perfect for small & family sized bathrooms thanks to its short projection of 36cm and its deep bowl to limit splashing.

Pair with one of our UNI, KINGSBURY, and MONUMENT 50cm units.

*With an overflow

TECHNICAL DRAWING

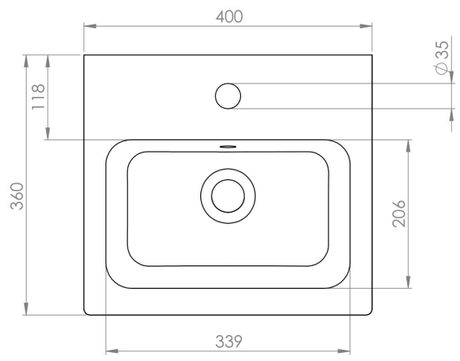

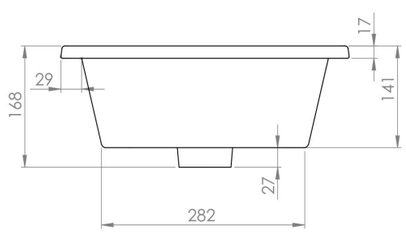

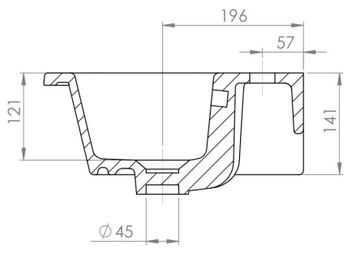

Saneux reserves the right to alter the specifications and product range without prior notice. Dimensions are given as a guide only. Dimensions should not be used for surrounding furniture, fixtures and fittings until the product is on site.

https://saneux.com/products/uni-40x36cm-washbasin-1th